

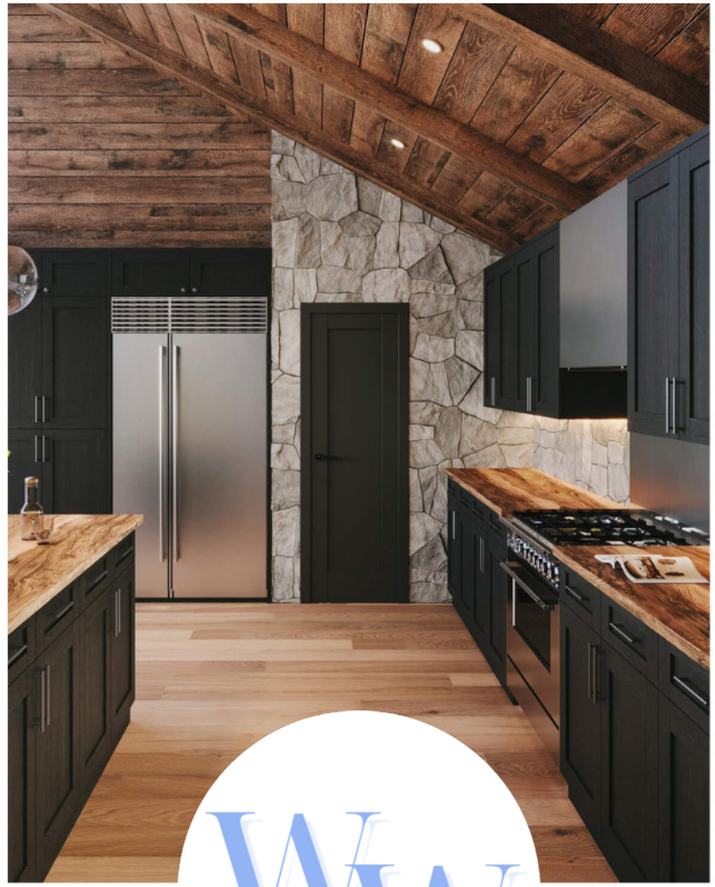









Whitewood Cabinets

2026 Product Catalog

Catalog Index

IN THIS CATALOG

Construction Features	3
Certifications	4
Door Style Overview	5
Kitchen & Door Style Pages	7
Shipping & Delivery	74
Warranty, Wood, Color & Finish	75
Contact & Professional Programs	76

PRODUCT SECTIONS

	PRICING	SPECS
Base Cabinets	26	46
Wall Cabinets	30	51
Tall Cabinets	35	56
Vanities	36	57
Fillers & Moldings	37	59
Panels & Skins	39	63
Columns & Floating Shelves	40	66
Valances & Range Hoods	41	66
Decor Legs & Corbels	41	67
Glass Doors	43	71
Mullion Glass Doors	44	72
Lattice Doors	44	73
Touch-Up & Samples	45	73
Roll-Outs & Trash Pullout	45	50

Built for everyday living

Cabinet construction at a glance. Refer to each door-style page for collection-specific materials and finishes.

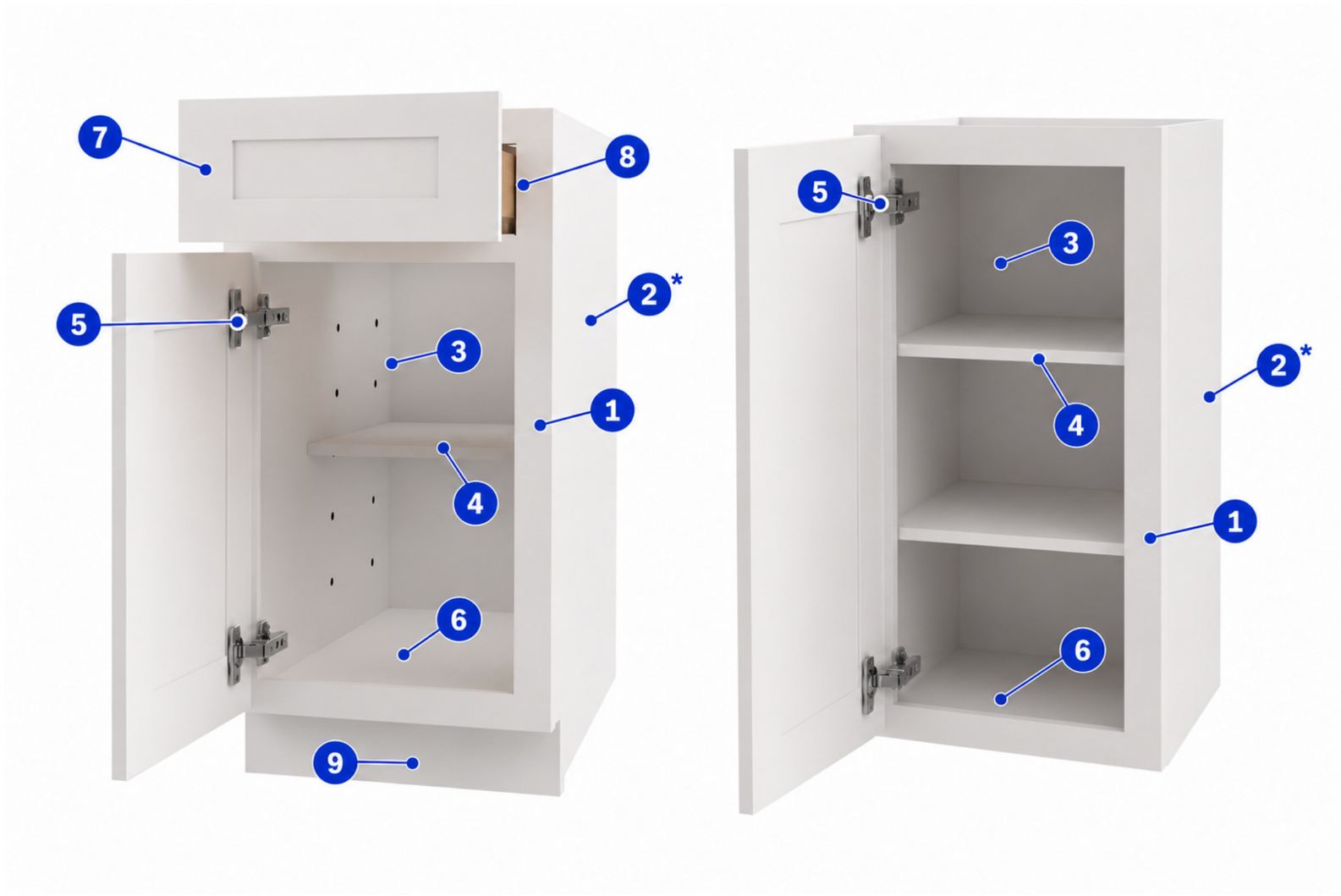

1. **Face frame**
   Framed cabinet construction.
2. **Finished exterior side***
   Plywood cabinet-box sides with a coordinated exterior finish.
3. **Interior back**
   Back-panel construction and thickness vary by collection.
4. **Adjustable shelf**
   Shelf material, thickness and support details are listed by style.
5. **Concealed hinge**
   Adjustable concealed hinges with soft-close functionality.
6. **Cabinet bottom**
   Bottom-panel construction varies by wall and base cabinet.
7. **Drawer front**
   Door and drawer-front profiles coordinate within each collection.
8. **Drawer box**
   Dovetail wood drawer boxes; see the style page for materials and sizing.
9. **Toe kick**
   Recessed front toe-kick area with a coordinating finished front.

* Petit Oak and Homestead Oak have stained plywood sides and require finish skins for matching oak grain on exposed sides.

Our cabinet collections are manufactured by Forevermark Cabinetry. Common features include undermount, full-extension soft-close drawer guides and wood base-corner supports; details vary by style. The graphic illustrates visible parts only.

Certifications

Waterborne UV finishes

Sherwin-Williams water-reducible UV finishes combine scratch resistance with low-VOC coatings (2.3 lb/gal or less) and HAPS-free formulation. UV curing helps create a durable finish for everyday cabinet use.

Applies to: PW, PD, PS, PR, PH, SL, AZ, AR, AA, AH, AN

GREENGUARD Gold

GREENGUARD Gold certification evaluates product chemical emissions against limits designed to support indoor air quality, including use in sensitive environments such as schools and healthcare facilities.

Applies to: PW, PD, PS, PR, PH, SL, AZ, AR, AA, AH, AN

FSC material sourcing

Forest Stewardship Council certification supports responsible forest management and traceable material sourcing. For the collections listed here, FSC certification applies to raw materials.

Applies to: PS, PR, PH, AZ, AR, AA, AH, AN (raw materials)

CARB2 & EPA TSCA Title VI

CARB Phase 2 and EPA TSCA Title VI establish formaldehyde-emissions limits for regulated composite-wood materials used in cabinetry. Compliance addresses emissions from those materials.

Applies to: All catalog collections

ANSI/KCMA A161.1 performance

Cabinet performance testing evaluates shelf and bottom loading, joint strength, repeated door and drawer operation, impact resistance, and finish resistance to temperature, humidity, spills and detergents. These laboratory tests assess durability; test loads are not installed-cabinet load ratings.



PW Petit White



PD Petit Blue



PS Petit Sand



PR Petit Brown



PH Petit Oak



AW Ice White Shaker



SL Signature Pearl



TW Uptown White



AG Greystone Shaker



AB Lait Grey Shaker

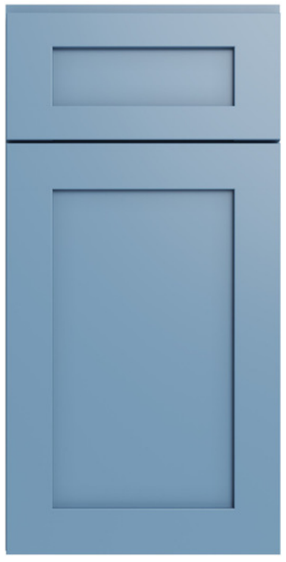

AX Xterra Blue Shaker



AR Woodland Brown Shaker



AZ Champagne Maple Shaker



AN Nova Light Grey Shaker



TQ Townplace Crema



AA Blaze Black Shaker



AH Homestead Oak Shaker



CZ Cullian Champagne



AE Estate Brown Shaker

Petit White



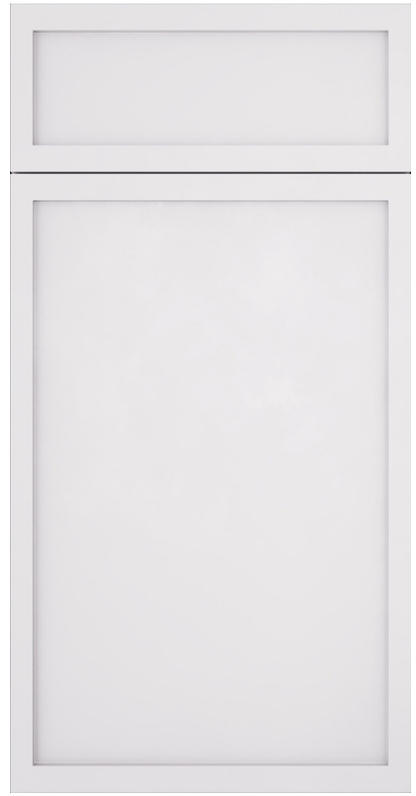

STYLE	Full Overlay
WALL & BASE	Recessed Square
FRONT FRAME	Solid Wood
DOOR FRAME	MDF
DOOR CENTER	MDF
SIDES	1/2" A-Grade Plywood with Wood Veneer
TOP & BOTTOM WALL	1/2" A-Grade Plywood with Wood Veneer
BOTTOM BASE	3/8" A-Grade Plywood with Wood Veneer
CABINET INTERIOR	Matches Door Color

BACK PANEL	1/2" Full Back
HINGES	Concealed 6-Way Adjustable Soft Close Door Hinges
CONNECTORS	Pre-Installed, Color Coated Metal Clip, won't Tarnish
SHELVES	3/4" A-Grade Plywood with Veneer, Metal Shelf Clips
DRAWER BOX	Solid Wood 17mm (close to 3/4"), Drawer Bottom 3/8" Plywood, Drawer Length 21", Dovetail Construction, Natural Finish
DRAWER GUIDES	Undermount, Full Extension with Soft Closing Feature
BASE CORNER SUPPORTS	Wood Corner Brackets with Wood I Beam Construction
FINISH	Waterborne UV finish (Sherwin-Williams)

View this collection online

Petit Blue





STYLE	Full Overlay
WALL & BASE	Recessed Square
FRONT FRAME	Solid Wood
DOOR FRAME	MDF
DOOR CENTER	MDF
SIDES	1/2" A-Grade Plywood with Wood Veneer
TOP & BOTTOM WALL	1/2" A-Grade Plywood with Wood Veneer
BOTTOM BASE	3/8" A-Grade Plywood with Wood Veneer
CABINET INTERIOR	Matches Door Color

BACK PANEL	1/2" Full Back
HINGES	Concealed 6-Way Adjustable Soft Close Door Hinges
CONNECTORS	Pre-Installed, Color Coated Metal Clip, won't Tarnish
SHELVES	3/4" A-Grade Plywood with Veneer, Metal Shelf Clips
DRAWER BOX	Solid Wood 17mm (close to 3/4"), Drawer Bottom 3/8" Plywood, Drawer Length 21", Dovetail Construction, Natural Finish
DRAWER GUIDES	Undermount, Full Extension with Soft Closing Feature
BASE CORNER SUPPORTS	Wood Corner Brackets with Wood I Beam Construction
FINISH	Waterborne UV finish (Sherwin-Williams)

View this collection online

Petit Sand





STYLE	Full Overlay
WALL & BASE	Recessed Square
FRONT FRAME	3/4" Solid Eucalyptus Grandis
DOOR FRAME	3/4" Solid Eucalyptus Grandis
DOOR CENTER	MDF with both sides Eucalyptus Grandis Veneer
SIDES	1/2" A-Grade Plywood with Wood Veneer
TOP & BOTTOM WALL	1/2" A-Grade Plywood with Wood Veneer
BOTTOM BASE	3/8" A-Grade Plywood with Wood Veneer
CABINET INTERIOR	Matches Door Color

BACK PANEL	Wall & Base 1/2" Full Back
HINGES	Concealed 6-Way Adjustable Soft Close Door Hinges
CONNECTORS	Pre-Installed, Color Coated Metal Clip, won't Tarnish
SHELVES	3/4" A-Grade Plywood with Veneer, Metal Shelf Clips
DRAWER BOX	Solid Wood 17mm (close to 3/4"), Drawer Bottom 3/8" Plywood, Drawer Length 21", Dovetail Construction, Natural Finish
DRAWER GUIDES	Undermount, Full Extension with Soft Closing Feature
BASE CORNER SUPPORTS	Wood Corner Brackets with Wood I Beam Construction
FINISH	Waterborne UV finish (Sherwin-Williams)

View this collection online

Petit Brown





STYLE	Full Overlay
WALL & BASE	Recessed Square
FRONT FRAME	3/4" Solid Eucalyptus Grandis
DOOR FRAME	3/4" Solid Eucalyptus Grandis
DOOR CENTER	MDF with both sides Eucalyptus Grandis Veneer
SIDES	1/2" A-Grade Plywood with Wood Veneer
TOP & BOTTOM WALL	1/2" A-Grade Plywood with Wood Veneer
BOTTOM BASE	3/8" A-Grade Plywood with Wood Veneer

HINGES	Concealed 6-Way Adjustable Soft Close Door Hinges
CONNECTORS	Pre-Installed, Color Coated Metal Clip, won't Tarnish
SHELVES	3/4" A-Grade Plywood with Veneer, Metal Shelf Clips
DRAWER BOX	Solid Wood 17mm (close to 3/4"), Drawer Bottom 3/8" Plywood, Drawer Length 21", Dovetail Construction, Natural Finish
DRAWER GUIDES	Undermount, Full Extension with Soft Closing Feature
BASE CORNER SUPPORTS	Wood Corner Brackets with Wood I Beam Construction
FINISH	Waterborne UV finish (Sherwin-Williams)

View this collection online

Petit Oak





STYLE	Full Overlay
WALL & BASE	Recessed Square
FRONT FRAME	American Oak
DOOR FRAME	American Oak
DOOR CENTER	American Oak Veneer on HDF
SIDES	1/2" A-Grade Plywood with Wood Veneer
TOP & BOTTOM WALL	1/2" A-Grade Plywood with Wood Veneer
BOTTOM BASE	3/8" A-Grade Plywood with Wood Veneer
CABINET INTERIOR	Matches Door Color

BACK PANEL	1/2" Full Back
HINGES	Concealed 6-Way Adjustable Soft Close Door Hinges
CONNECTORS	Pre-Installed, Color Coated Metal Clip, won't Tarnish
SHELVES	3/4" A-Grade Plywood with Veneer, Metal Shelf Clips
DRAWER BOX	Solid Wood 17mm (close to 3/4"), Drawer Bottom 3/8" Plywood, Drawer Length 21", Dovetail Construction, Natural Finish
DRAWER GUIDES	Undermount, Full Extension with Soft Closing Feature
BASE CORNER SUPPORTS	Wood Corner Brackets with Wood I Beam Construction
FINISH	Waterborne UV finish (Sherwin-Williams)

View this collection online

Ice White Shaker



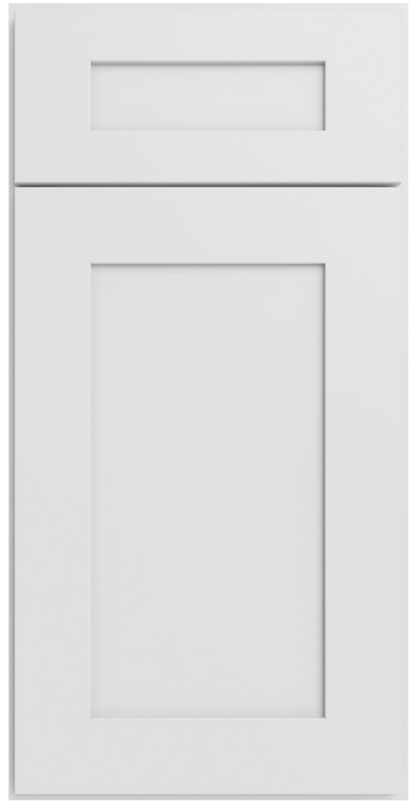

STYLE	Full Overlay
WALL & BASE	Recessed Square
FRONT FRAME	Solid Wood
DOOR FRAME	MDF
DOOR CENTER	MDF
SIDES	1/2" A-Grade Plywood with Wood Veneer
TOP & BOTTOM WALL	1/2" A-Grade Plywood with Wood Veneer
BOTTOM BASE	3/8" A-Grade Plywood with Wood Veneer

BACK PANEL	1/2" Picture Frame Recess Style
HINGES	Concealed 6-Way Adjustable Soft Close Door Hinges
CONNECTORS	Pre-Installed, Color Coated Metal Clip, won't Tarnish
SHELVES	3/4" A-Grade Plywood with Veneer, Metal Shelf Clips
DRAWER BOX	Solid Wood 17mm (close to 3/4"), Drawer Bottom 3/8" Plywood, Drawer Length 21", Dovetail Construction, Natural Finish
DRAWER GUIDES	Undermount, Full Extension with Soft Closing Feature
BASE CORNER SUPPORTS	Wood Corner Brackets with Wood I Beam Construction

View this collection online

Signature Pearl





STYLE	Full Overlay
WALL & BASE	Raised Square
FRONT FRAME	3/4" Solid Birch
DOOR FRAME	Solid Wood
DOOR CENTER	MDF
SIDES	1/2" A-Grade Plywood with Wood Veneer
TOP & BOTTOM WALL	1/2" A-Grade Plywood with Wood Veneer
BOTTOM BASE	3/8" A-Grade Plywood with Wood Veneer

BACK PANEL	1/2" Picture Frame Recess Style
HINGES	Concealed 6-Way Adjustable Soft Close Door Hinges
CONNECTORS	Pre-Installed, Color Coated Metal Clip, won't Tarnish
SHELVES	3/4" A-Grade Plywood with Veneer, Metal Shelf Clips
DRAWER BOX	Solid Wood 17mm (close to 3/4"), Drawer Bottom 3/8" Plywood, Drawer Length 21", Dovetail Construction, Natural Finish
DRAWER GUIDES	Undermount, Full Extension with Soft Closing Feature
BASE CORNER SUPPORTS	Wood Corner Brackets with Wood I Beam Construction
FINISH	Waterborne UV finish (Sherwin-Williams)

View this collection online

Uptown White



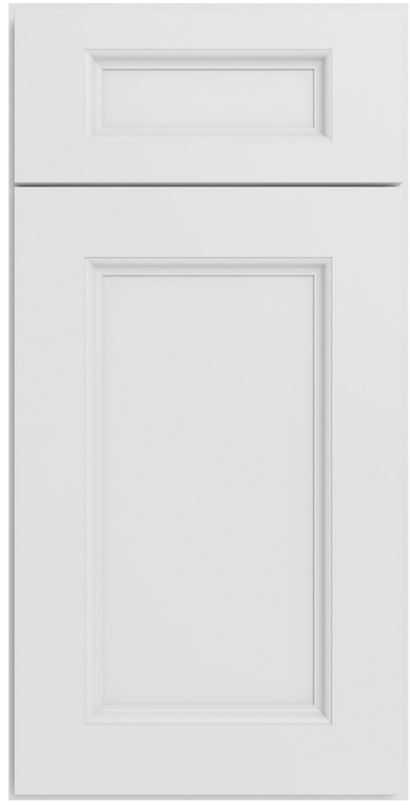

STYLE	Full Overlay
WALL & BASE	Recessed Square
FRONT FRAME	3/4" Solid Birch
DOOR FRAME	Solid Wood
DOOR CENTER	MDF
SIDES	1/2" A-Grade Plywood with Wood Veneer
TOP & BOTTOM WALL	1/2" A-Grade Plywood with Wood Veneer
BOTTOM BASE	3/8" A-Grade Plywood with Wood Veneer

BACK PANEL	1/2" Picture Frame Recess Style
HINGES	Concealed 6-Way Adjustable Soft Close Door Hinges
CONNECTORS	Pre-Installed, Color Coated Metal Clip, won't Tarnish
SHELVES	3/4" A-Grade Plywood with Veneer, Metal Shelf Clips
DRAWER BOX	Solid Wood 17mm (close to 3/4"), Drawer Bottom 3/8" Plywood, Drawer Length 21", Dovetail Construction, Natural Finish
DRAWER GUIDES	Undermount, Full Extension with Soft Closing Feature
BASE CORNER SUPPORTS	Wood Corner Brackets with Wood I Beam Construction

View this collection online

Greystone Shaker





STYLE	Full Overlay
WALL & BASE	Recessed Square
FRONT FRAME	3/4" Solid Birch
DOOR FRAME	3/4" Solid Wood
DOOR CENTER	MDF
SIDES	1/2" A-Grade Plywood with Wood Veneer
TOP & BOTTOM WALL	1/2" A-Grade Plywood with Wood Veneer
BOTTOM BASE	3/8" A-Grade Plywood with Wood Veneer

BACK PANEL	1/2" Picture Frame Recess Style
HINGES	Concealed 6-Way Adjustable Soft Close Door Hinges
CONNECTORS	Pre-Installed, Color Coated Metal Clip, won't Tarnish
SHELVES	3/4" A-Grade Plywood with Veneer, Metal Shelf Clips
DRAWER BOX	Solid Wood 17mm (close to 3/4"), Drawer Bottom 3/8" Plywood, Drawer Length 21", Dovetail Construction, Natural Finish
DRAWER GUIDES	Undermount, Full Extension with Soft Closing Feature
BASE CORNER SUPPORTS	Wood Corner Brackets with Wood I Beam Construction

View this collection online

Lait Grey Shaker





STYLE	Full Overlay
WALL & BASE	Recessed Square
FRONT FRAME	3/4" Solid Birch
DOOR FRAME	HDF
DOOR CENTER	MDF
SIDES	1/2" A-Grade Plywood with Wood Veneer
TOP & BOTTOM WALL	1/2" A-Grade Plywood with Wood Veneer
BOTTOM BASE	3/8" A-Grade Plywood with Wood Veneer

BACK PANEL	Wall and Base 1/2" Full Back
HINGES	Concealed 6-Way Adjustable Soft Close Door Hinges
CONNECTORS	Pre-Installed, Color Coated Metal Clip, won't Tarnish
SHELVES	3/4" A-Grade Plywood with Veneer, Metal Shelf Clips
DRAWER BOX	Solid Wood 17mm (close to 3/4"), Drawer Bottom 3/8" Plywood, Drawer Length 21", Dovetail Construction, Natural Finish
DRAWER GUIDES	Undermount, Full Extension with Soft Closing Feature
BASE CORNER SUPPORTS	Wood Corner Brackets with Wood I Beam Construction

View this collection online

Xterra Blue Shaker



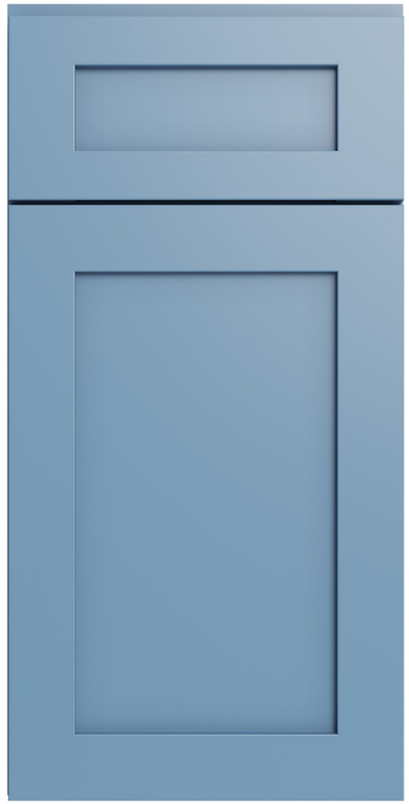

STYLE	Full Overlay
WALL & BASE	Recessed Square
FRONT FRAME	3/4" Solid Birch
DOOR FRAME	HDF
DOOR CENTER	MDF
SIDES	1/2" A-Grade Plywood with Wood Veneer
TOP & BOTTOM WALL	1/2" A-Grade Plywood with Wood Veneer
BOTTOM BASE	3/8" A-Grade Plywood with Wood Veneer

BACK PANEL	Wall and Base 1/2" Full Back
HINGES	Concealed 6-Way Adjustable Soft Close Door Hinges
CONNECTORS	Pre-Installed, Color Coated Metal Clip, won't Tarnish
SHELVES	3/4" A-Grade Plywood with Veneer, Metal Shelf Clips
DRAWER BOX	Solid Wood 17mm (close to 3/4"), Drawer Bottom 3/8" Plywood, Drawer Length 21", Dovetail Construction, Natural Finish
DRAWER GUIDES	Undermount, Full Extension with Soft Closing Feature
BASE CORNER SUPPORTS	Wood Corner Brackets with Wood I Beam Construction

View this collection online

Woodland Brown Shaker





STYLE	Full Overlay
WALL & BASE	Recessed Square
FRONT FRAME	3/4" Solid Eucalyptus Grandis
DOOR FRAME	3/4" Solid Eucalyptus Grandis
DOOR CENTER	MDF with Both Sides Eucalyptus Grandis Veneer
SIDES	1/2" A-Grade Plywood with Wood Veneer
TOP & BOTTOM WALL	1/2" A-Grade Plywood with Wood Veneer
BOTTOM BASE	3/8" A-Grade Plywood with Wood Veneer

BACK PANEL	Wall and Base 1/2" Full Back
HINGES	Concealed 6-Way Adjustable Soft Close Door Hinges
CONNECTORS	Pre-Installed, Color Coated Metal Clip, won't Tarnish
SHELVES	3/4" A-Grade Plywood with Veneer, Metal Shelf Clips
DRAWER BOX	Solid Wood 17mm (close to 3/4"), Drawer Bottom 3/8" Plywood, Drawer Length 21", Dovetail Construction, Natural Finish
DRAWER GUIDES	Undermount, Full Extension with Soft Closing Feature
BASE CORNER SUPPORTS	Wood Corner Brackets with Wood I Beam Construction
FINISH	Waterborne UV finish (Sherwin-Williams)

View this collection online

Champagne Maple Shaker





STYLE	Full Overlay
WALL & BASE	Recessed Square
FRONT FRAME	3/4" Solid Wood
DOOR FRAME	American Maple
DOOR CENTER	HDF
SIDES	1/2" A-Grade Plywood with Wood Veneer
TOP & BOTTOM WALL	1/2" A-Grade Plywood with Wood Veneer
BOTTOM BASE	3/8" A-Grade Plywood with Wood Veneer

BACK PANEL	Wall: 1/2" Picture Frame Recess Style, Base: 1/2" Full Back
HINGES	Concealed 6-Way Adjustable Soft Close Door Hinges
CONNECTORS	Pre-Installed, Color Coated Metal Clip, won't Tarnish
SHELVES	3/4" A-Grade Plywood with Veneer, Metal Shelf Clips
DRAWER BOX	Solid Wood 17mm (close to 3/4"), Drawer Bottom 3/8" Plywood, Drawer Length 21", Dovetail Construction, Natural Finish
DRAWER GUIDES	Undermount, Full Extension with Soft Closing Feature
BASE CORNER SUPPORTS	Wood Corner Brackets with Wood I Beam Construction
FINISH	Waterborne UV finish (Sherwin-Williams)

View this collection online

Nova Light Grey Shaker





STYLE	Full Overlay
WALL & BASE	Recessed Square
FRONT FRAME	3/4" Solid Eucalyptus Grandis
DOOR FRAME	3/4" Solid Eucalyptus Grandis
DOOR CENTER	Solid Eucalyptus Grandis (Reversed raised door panel)
SIDES	1/2" A-Grade Plywood with Wood Veneer
TOP & BOTTOM WALL	1/2" A-Grade Plywood with Wood Veneer
BOTTOM BASE	3/8" A-Grade Plywood with Wood Veneer

HINGES	Concealed 6-Way Adjustable Soft Close Door Hinges
CONNECTORS	Pre-Installed, Color Coated Metal Clip, won't Tarnish
SHELVES	3/4" A-Grade Plywood with Veneer, Metal Shelf Clips
DRAWER BOX	Solid Wood 17mm (close to 3/4"), Drawer Bottom 3/8" Plywood, Drawer Length 21", Dovetail Construction, Natural Finish
DRAWER GUIDES	Undermount, Full Extension with Soft Closing Feature
BASE CORNER SUPPORTS	Wood Corner Brackets with Wood I Beam Construction
FINISH	Waterborne UV finish (Sherwin-Williams)

View this collection online

Townplace Crema





STYLE	Full Overlay
WALL & BASE	Recessed Square
FRONT FRAME	3/4" Solid Wood
DOOR FRAME	3/4" Solid Wood
DOOR CENTER	MDF (Reversed raised door panel)
SIDES	1/2" A-Grade Plywood with Wood Veneer
TOP & BOTTOM WALL	1/2" A-Grade Plywood with Wood Veneer
BOTTOM BASE	3/8" A-Grade Plywood with Wood Veneer

BACK PANEL	Wall: 1/2" Picture Frame recess style, Base: 1/2" Full Back
HINGES	Concealed 6-Way Adjustable Soft Close Door Hinges
CONNECTORS	Pre-Installed, Color Coated Metal Clip, won't Tarnish
SHELVES	3/4" A-Grade Plywood with Veneer, Metal Shelf Clips
DRAWER BOX	Solid Wood 17mm (close to 3/4"), Drawer Bottom 3/8" Plywood, Drawer Length 21", Dovetail Construction, Natural Finish
DRAWER GUIDES	Undermount, Full Extension with Soft Closing Feature
BASE CORNER SUPPORTS	Wood Corner Brackets with Wood I Beam Construction

View this collection online

Blaze Black Shaker





STYLE	Full Overlay
WALL & BASE	Recessed Square
FRONT FRAME	3/4" Solid Eucalyptus Grandis
DOOR FRAME	3/4" Solid Eucalyptus Grandis
DOOR CENTER	Solid Eucalyptus Grandis (Reversed raised door panel)
SIDES	1/2" A-Grade Plywood with Wood Veneer
TOP & BOTTOM WALL	1/2" A-Grade Plywood with Wood Veneer
BOTTOM BASE	3/8" A-Grade Plywood with Wood Veneer
CABINET INTERIOR	Matches Door Color

BACK PANEL	Wall & Base 1/2" Full Back
HINGES	Concealed 6-Way Adjustable Soft Close Door Hinges
CONNECTORS	Pre-Installed, Color Coated Metal Clip, won't Tarnish
SHELVES	3/4" A-Grade Plywood with Veneer, Metal Shelf Clips
DRAWER BOX	Solid Wood 17mm (close to 3/4"), Drawer Bottom 3/8" Plywood, Drawer Length 21", Dovetail Construction, Natural Finish
DRAWER GUIDES	Undermount, Full Extension with Soft Closing Feature
BASE CORNER SUPPORTS	Wood Corner Brackets with Wood I Beam Construction
FINISH	Waterborne UV finish (Sherwin-Williams)

View this collection online

Homestead Oak Shaker





STYLE	Full Overlay
WALL & BASE	Recessed Square
FRONT FRAME	American Oak
DOOR FRAME	American Oak
DOOR CENTER	American Oak Veneer on HDF
SIDES	1/2" A-Grade Plywood with Wood Veneer
TOP & BOTTOM WALL	1/2" A-Grade Plywood with Wood Veneer
BOTTOM BASE	3/8" A-Grade Plywood with Wood Veneer
CABINET INTERIOR	Matches Door Color

BACK PANEL	1/2" Full Back
HINGES	Concealed 6-Way Adjustable Soft Close Door Hinges
CONNECTORS	Pre-Installed, Color Coated Metal Clip, won't Tarnish
SHELVES	3/4" A-Grade Plywood with Veneer, Metal Shelf Clips
DRAWER BOX	Solid Wood 17mm (close to 3/4"), Drawer Bottom 3/8" Plywood, Drawer Length 21", Dovetail Construction, Natural Finish
DRAWER GUIDES	Undermount, Full Extension with Soft Closing Feature
BASE CORNER SUPPORTS	Wood Corner Brackets with Wood I Beam Construction
FINISH	Waterborne UV finish (Sherwin-Williams)

View this collection online

Cullian Champagne





STYLE	Full Overlay
SIDES	1/2" A-Grade Plywood with Wood Veneer
TOP & BOTTOM WALL	1/2" A-Grade Plywood with Wood Veneer
BOTTOM BASE	3/8" A-Grade Plywood with Wood Veneer
CABINET INTERIOR	Matches Door Color
HINGES	Concealed 6-Way Adjustable Soft Close Door Hinges

CONNECTORS	Pre-Installed, Color Coated Metal Clip, won't Tarnish
SHELVES	3/4" A-Grade Plywood with Veneer, Metal Shelf Clips
DRAWER BOX	Solid Wood 17mm (close to 3/4"), Drawer Bottom 3/8" Plywood, Drawer Length 21", Dovetail Construction, Natural Finish
DRAWER GUIDES	Undermount, Full Extension with Soft Closing Feature
BASE CORNER SUPPORTS	Wood Corner Brackets with Wood I Beam Construction

View this collection online

Estate Brown Shaker



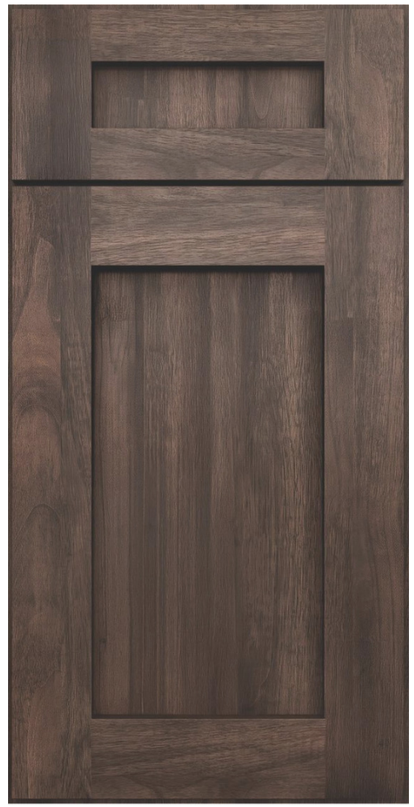

STYLE	Full Overlay
SIDES	1/2" A-Grade Plywood with Wood Veneer
TOP & BOTTOM WALL	1/2" A-Grade Plywood with Wood Veneer
BOTTOM BASE	3/8" A-Grade Plywood with Wood Veneer
CABINET INTERIOR	Matches Door Color
HINGES	Concealed 6-Way Adjustable Soft Close Door Hinges

CONNECTORS	Pre-Installed, Color Coated Metal Clip, won't Tarnish
SHELVES	3/4" A-Grade Plywood with Veneer, Metal Shelf Clips
DRAWER BOX	Solid Wood 17mm (close to 3/4"), Drawer Bottom 3/8" Plywood, Drawer Length 21", Dovetail Construction, Natural Finish
DRAWER GUIDES	Undermount, Full Extension with Soft Closing Feature
BASE CORNER SUPPORTS	Wood Corner Brackets with Wood I Beam Construction

View this collection online

Standard Sink Base Cabinets

SKU	PW, PD, PS, PR, AW	PH, SL, TW, AG, AB, AX, AZ	AR	AN, TQ, AA, AH, AE	CZ
SB24B	$625.00	$643.00	$643.00	$720.00	-
SB27B	$656.00	$674.00	$674.00	$756.00	$870.00
SB30B	$678.00	$698.00	$698.00	$783.00	$899.00
SB33B	$702.00	$725.00	$725.00	$813.00	$936.00
SB36B	$732.00	$750.00	$750.00	$841.00	$966.00
SB42B	$945.00	$967.00	-	$1,085.00	-

Farm Sink Base Cabinets

SKU	PW, PD, PS, PR, AW	PH, SL, TW, AG, AB, AX, AR, AZ	AN, TQ, AA, AH, AE	CZ
FSB30B	$965.00	$994.00	$1,114.00	$1,281.00
FSB33B	$1,009.00	$1,040.00	$1,168.00	$1,342.00
FSB36B	$1,051.00	$1,085.00	$1,216.00	$1,399.00

Diagonal Sink Base Cabinets

SKU	PW, PD, PS, PR, AW	PH, SL, TW, AG, AB, AX, AR, AZ	AN, TQ, AA, AH, AE	CZ
BDCF36	$1,212.00	$1,251.00	$1,403.00	$1,613.00
BDCF36K-FL	$365.00	$376.00	$423.00	$487.00

Standard Base Cabinets

SKU	PW, PD, PS, PR, AW	PH, SL, TW, AG, AB, AX, AR, AZ	AN, TQ, AA, AH, AE	CZ
B09	$440.00	$465.00	$523.00	$601.00
B12	$498.00	$525.00	$589.00	$677.00

Standard Base Cabinets (continued)

SKU	PW, PD, PS, PR, AW	PH, SL, TW, AG, AB, AX, AR, AZ	AN, TQ, AA, AH, AE	CZ
B15	$521.00	$547.00	$614.00	$706.00
B18	$545.00	$574.00	$643.00	$739.00
B21	$616.00	$647.00	$725.00	$834.00
B24B	$663.00	$693.00	$778.00	$895.00
B27B	$713.00	$747.00	$839.00	$964.00
B30B	$831.00	$880.00	$987.00	$1,136.00
B33B	$869.00	$920.00	$1,031.00	$1,186.00
B36B	$907.00	$959.00	$1,074.00	$1,235.00

Full Height Door Base Cabinets

SKU	PW, PD, PS, PR, AW	PH, SL, TW, AG, AX, AN, TQ	AB, AR, AZ	AA, AH, AE	CZ
FB09	$421.00	-	$443.00	$498.00	$573.00
FB12	$475.00	-	$501.00	$561.00	$646.00
FB15	$495.00	-	$521.00	$585.00	$673.00
FB18	$520.00	-	$547.00	$614.00	$707.00
FB24	$625.00	-	$643.00	$721.00	$829.00
FB30	$678.00	-	$698.00	$784.00	$902.00

2-Drawer Base Cabinets

SKU	PW, PD, PS, PR	PH, AR	AW	SL, TW, AG, AB, AX	AZ	AN, TQ	AA, AH, AE	CZ
2DB15	$864.00	$922.00	-	-	-	-	$1,033.00	-
2DB18	$885.00	$946.00	-	-	-	-	$1,061.00	-
2DB24	$956.00	$1,020.00	-	$1,020.00	-	$1,144.00	$1,144.00	$1,316.00

2-Drawer Base Cabinets (continued)

SKU	PW, PD, PS, PR	PH, AR	AW	SL, TW, AG, AB, AX	AZ	AN, TQ	AA, AH, AE	CZ
2DB30	$1,586.00	$1,609.00	-	$1,609.00	$1,609.00	$1,803.00	$1,803.00	$2,074.00
2DB36	$1,624.00	$1,661.00	-	$1,661.00	$1,661.00	$1,863.00	$1,863.00	$2,143.00

3-Drawer Base Cabinets

SKU	PW, PD, PS, PR, AW	PH, SL, TW, AG, AB, AX, AR, AZ	AN, TQ, AA, AH	CZ	AE
3DB12	$872.00	$931.00	$1,044.00	$1,202.00	$1,044.00
3DB15	$909.00	$972.00	$1,089.00	$1,254.00	$1,089.00
3DB18	$931.00	$996.00	$1,116.00	$1,283.00	$1,116.00
3DB21	$959.00	$1,022.00	$1,147.00	$1,320.00	$1,147.00
3DB24	$1,007.00	$1,074.00	$1,203.00	$1,382.00	$1,203.00
3DB27	-	-	-	$1,783.00	$1,551.00
3DB30	$1,669.00	$1,693.00	$1,898.00	$2,183.00	$1,898.00
3DB33	-	-	-	$2,220.00	$1,930.00
3DB36	$1,709.00	$1,749.00	$1,961.00	$2,255.00	$1,961.00

Lazy Susan Corner Base Cabinets

SKU	PW, PD, PS, PR, AW	PH, SL, TW, AG, AB, AX, AR, AZ	AN, TQ, AA, AH, AE	CZ
LS3309	$1,203.00	$1,242.00	$1,394.00	$1,602.00
LS3612	$1,298.00	$1,342.00	$1,505.00	$1,731.00

EZ-Reach Corner Base Cabinets

SKU	PW, PD, PS, PR, AW	PH, SL, TW, AG, AB, AX, AR, AZ	AN, TQ, AA, AH, AE	CZ
LS3612S	$1,149.00	$1,212.00	$1,358.00	$1,562.00

Blind Base Cabinets

SKU	PW, PD, PS, PR, AW	PH, SL, TW, AG, AB, AX, AR, AZ	AN, TQ, AA, AH, AE	CZ
BBLC39/42	$931.00	$972.00	$1,089.00	$1,254.00
BBLC42/45	$942.00	$983.00	$1,103.00	$1,268.00
BBLC45/48	$952.00	$994.00	$1,114.00	$1,281.00

Angle Base Cabinets

SKU	PW, PD, PS, PR, AW	PH, SL, TW, AG, AB, AX, AR, AZ	AN, TQ, AA, AH, AE	CZ
AB24	$1,151.00	$1,190.00	$1,334.00	$1,534.00

Transitional Base Cabinets

SKU	PW, PD, PS, PR, AW	PH, SL, TW, AG, AB, AX, AR, AZ	AN, TQ, AA, AH, AE	CZ
BTC12L	$523.00	$538.00	$604.00	$696.00
BTC12R	$523.00	$538.00	$604.00	$696.00

Microwave Base Cabinets

SKU	PW, PD, PS, PR, AW	PH, TW, AG, AB, AR	SL, AX	AZ	AN	TQ, AA, AH, AE	CZ
B24MW	$684.00	$715.00	-	$715.00	-	$802.00	$922.00
B27MW	$735.00	$770.00	-	-	-	$863.00	$993.00
B30MW	$856.00	$880.00	$880.00	$880.00	$987.00	$987.00	$1,136.00

Accessory Base Cabinets

SKU	PW, PD, PS, PR, AW	PH, SL, TW, AG, AB, AX, AR, AZ	AN, TQ, AA, AH, AE	CZ
BFP09	$1,087.00	$1,103.00	$1,236.00	$1,421.00

30-inch Tall Standard Wall Cabinets

SKU	PW, PD, PS, PR, AW	PH, SL, TW, AG, AB, AX, AR, AZ	AN, TQ, AA, AH, AE	CZ
W0930	$267.00	$275.00	$310.00	$356.00
W1230	$296.00	$305.00	$343.00	$394.00
W1530	$323.00	$334.00	$373.00	$431.00
W1830	$358.00	$369.00	$414.00	$476.00
W2130	$434.00	$445.00	$498.00	$573.00
W2430B	$462.00	$478.00	$536.00	$617.00
W2730B	$505.00	$521.00	$585.00	$673.00
W3030B	$523.00	$538.00	$604.00	$696.00
W3330B	$563.00	$578.00	$649.00	$746.00
W3630B	$598.00	$619.00	$693.00	$798.00

36-inch Tall Standard Wall Cabinets

SKU	PW, PD, PS, PR, AW	PH, SL, TW, AG, AB, AX, AR, AZ	AN, TQ, AA, AH, AE	CZ
W0936	$338.00	$349.00	$392.00	$450.00
W1236	$358.00	$369.00	$414.00	$476.00
W1536	$390.00	$401.00	$449.00	$516.00
W1836	$434.00	$445.00	$498.00	$573.00
W2136	$519.00	$532.00	$596.00	$686.00
W2436B	$552.00	$569.00	$638.00	$734.00
W2736B	$625.00	$645.00	$723.00	$831.00
W3036B	$676.00	$696.00	$780.00	$897.00

36-inch Tall Standard Wall Cabinets (continued)

SKU	PW, PD, PS, PR, AW	PH, SL, TW, AG, AB, AX, AR, AZ	AN, TQ, AA, AH, AE	CZ
W3336B	$718.00	$741.00	$829.00	$954.00
W3636B	$752.00	$774.00	$867.00	$997.00

42-inch Tall Standard Wall Cabinets

SKU	PW, PD, PS, PR, AW	PH, SL, TW, AG, AB, AX, AR, AZ	AN, TQ, AA, AH, AE	CZ
W0942	$376.00	$384.00	$432.00	$496.00
W1242	$396.00	$407.00	$456.00	$524.00
W1542	$432.00	$443.00	$495.00	$570.00
W1842	$476.00	$491.00	$552.00	$634.00
W2142	$574.00	$591.00	$663.00	$762.00
W2442B	$619.00	$636.00	$713.00	$820.00
W2742B	$720.00	$743.00	$834.00	-
W3042B	$798.00	$822.00	$922.00	$1,061.00
W3342B	$843.00	$867.00	$972.00	$1,117.00
W3642B	$896.00	$924.00	$1,036.00	$1,192.00

12-inch Tall Wall Cabinets

SKU	PW, PD, PS, PR, AW	PH, TW, AG, AB, AR, AZ	SL, AX	AN	TQ	AA, AH	CZ	AE
W1212	$130.00	$134.00	-	-	-	$150.00	$172.00	$150.00
W1512	$168.00	$172.00	-	-	-	$193.00	$222.00	$193.00
W1812	$207.00	$214.00	-	-	-	$240.00	$206.00	$240.00
W2112	$247.00	$258.00	-	-	-	$290.00	-	$290.00
W2412B	$285.00	$296.00	-	-	-	$332.00	$382.00	$332.00
W2712B	$337.00	$349.00	-	-	-	$392.00	$450.00	$392.00

12-inch Tall Wall Cabinets (continued)

SKU	PW, PD, PS, PR, AW	PH, TW, AG, AB, AR, AZ	SL, AX	AN	TQ	AA, AH	CZ	AE
W3012B	$301.00	$310.00	$310.00	$347.00	-	-	$399.00	$347.00
W301224B	$377.00	$389.00	$389.00	$436.00	-	-	$501.00	$436.00
W3312B	$321.00	$332.00	$332.00	-	-	$369.00	$425.00	$369.00
W3612B	$338.00	$347.00	$347.00	$390.00	-	-	$448.00	$390.00
W361224B	$456.00	$469.00	$469.00	$527.00	-	-	$607.00	$526.00

15-inch Tall Wall Cabinets

SKU	PW, PD, PS, PR, AW	PH, SL, TW, AG, AB, AX, AR, AZ	AN, TQ, AA, AH, AE	CZ
W2415B	$303.00	$310.00	$347.00	$399.00
W3015B	$338.00	$347.00	$390.00	$448.00
W301524B	$456.00	$471.00	$530.00	$609.00
W3315B	$365.00	$376.00	$423.00	$487.00
W331524B	$480.00	$495.00	$556.00	$640.00
W3615B	$371.00	$382.00	$429.00	$493.00
W361524B	$505.00	$521.00	$585.00	$673.00

18-inch Tall Wall Cabinets

SKU	PW, PD, PS, PR, AW	PH, SL, TW, AG, AB, AX, AR, AZ	AN, TQ, AA, AH, AE	CZ
W2418B	$323.00	$334.00	$373.00	$431.00
W3018B	$368.00	$382.00	$429.00	$493.00
W301824B	$560.00	$578.00	$649.00	$746.00
W3318B	$396.00	$407.00	$456.00	$524.00
W331824B	$567.00	$585.00	$656.00	$754.00
W3618B	$423.00	$434.00	$487.00	$560.00
W361824B	$574.00	$591.00	$663.00	$762.00

24-inch Tall Wall Cabinets

SKU	PW, PD, PS, PR, AW	PH, SL, TW, AG, AB, AX, AR, AZ	AN, TQ, AA, AH, AE	CZ
W2424B	$414.00	$427.00	$480.00	$553.00
W3024B	$465.00	$480.00	$538.00	$619.00
W302424B	$549.00	$567.00	$636.00	$732.00
W3324B	$498.00	$514.00	$576.00	$663.00
W332424B	$583.00	$604.00	$678.00	$779.00
W3624B	$534.00	$549.00	$616.00	$709.00
W362424B	$621.00	$641.00	$718.00	$826.00

Square Corner Wall Cabinets

SKU	PW, PD, PS, PR, AW	PH, SL, TW, AG, AB, AX, AR, AZ	AN, TQ, AA, AH, AE	CZ
WSQ2430	$1,025.00	$1,056.00	$1,183.00	$1,360.00
WSQ2436	$1,230.00	$1,267.00	$1,421.00	$1,634.00
WSQ2442	$1,476.00	$1,521.00	$1,704.00	$1,961.00

Diagonal Corner Wall Cabinets

SKU	PW, PD, PS, PR, AW	PH, TW, AG, AB, AR, AZ	SL, AX	AN, TQ	AA, AH, AE	CZ
WDC2412	$307.00	$316.00	-	-	$355.00	$408.00
WDC2430	$667.00	$687.00	$687.00	$772.00	$772.00	$887.00
WDC2436	$834.00	$861.00	$861.00	$965.00	$965.00	$1,109.00
WDC2442	$885.00	$913.00	$913.00	$1,025.00	$1,025.00	$1,179.00
WDC273615	$1,290.00	$1,301.00	$1,301.00	$1,458.00	$1,458.00	$1,677.00
WDC274215	$1,545.00	$1,556.00	$1,556.00	$1,743.00	$1,743.00	$2,004.00

Angle Wall Cabinets

SKU	PW, PD, PS, PR, AW	PH, SL, TW, AG, AB, AX, AR, AZ	AN, TQ, AA, AH, AE	CZ
AW30	$454.00	$469.00	$527.00	$607.00
AW36	$545.00	$563.00	$632.00	$727.00
AW42	$638.00	$658.00	$739.00	$727.00

Microwave Wall Cabinets

SKU	PW, PD, AW, SL, TW, AG, AB, AX	PS, PR, PH, AR, AZ, AN, TQ, AA, AH, AE	CZ
MWO3018	$371.00	$418.00	$481.00

Accessory Wall Cabinets

SKU	PW, PD, AW, SL, TW, AG, AB, AX	PS, PR	PH, AR, AZ, AN, TQ, AA, AH, AE	CZ
WC630	$336.00	$378.00	$378.00	$435.00
WC636	$396.00	$445.00	$445.00	$512.00
WC642	$456.00	$512.00	$512.00	$589.00
WES530	$201.00	$201.00	$225.00	$225.00
WES536	$240.00	$240.00	$269.00	$269.00
WES542	$283.00	$283.00	$318.00	$318.00
W3018WR	$438.00	$491.00	$491.00	$491.00

2-Drawer Wall Cabinets

SKU	PW, PD, PS, PR, AW	PH, SL, TW, AG, AB, AX, AR, AZ	AN, TQ, AA, AH, AE	CZ
W2D1848	$811.00	$836.00	$938.00	$1,079.00
W2D1854	$948.00	$976.00	$1,094.00	$1,258.00
W2D1860	$1,081.00	$1,114.00	$1,249.00	$1,437.00

Oven Tall Cabinets

SKU	PW, PD, PS, PR, AW	PH, SL, TW, AG, AB, AX, AR, AZ	AN, TQ, AA, AH, AE	CZ
OC3384B	$2,449.00	$2,562.00	$2,871.00	$3,302.00
OC3390B	$2,645.00	$2,765.00	$3,098.00	$3,563.00
OC3396B	$2,822.00	$2,950.00	$3,305.00	$3,800.00

Double Oven Tall Cabinets

SKU	PW, PD, PS, PR, AW	PH, SL, TW, AG, AB, AX, AR, AZ	AN, TQ, AA, AH, AE	CZ
OM3384B	$2,312.00	$2,418.00	$3,809.00	$3,116.00
OM3390	$2,495.00	$2,609.00	$2,922.00	$3,361.00
OM3396	$2,665.00	$2,782.00	$3,118.00	$3,586.00

Pantry Cabinets

SKU	PW, PD, PS, AW	PR	PH, SL, AG, AB, AX, AR, AZ	TW	AN, TQ	AA, AH, AE	CZ
WP1584	$1,340.00	$1,340.00	$1,380.00	$1,380.00	$1,547.00	$1,547.00	$1,779.00
WP1590	$1,438.00	$1,438.00	$1,484.00	$1,484.00	$1,665.00	$1,665.00	$1,915.00
WP1596	$1,536.00	$1,536.00	$1,587.00	$1,587.00	$1,778.00	$1,778.00	$2,045.00
WP1884	$1,501.00	$1,501.00	$1,547.00	$1,547.00	$1,734.00	$1,734.00	$1,994.00
WP1890	$1,602.00	$1,602.00	$1,663.00	$1,663.00	$1,863.00	$1,863.00	$2,143.00
WP1896	$1,720.00	$1,720.00	$1,778.00	$1,778.00	$1,991.00	$1,991.00	$2,290.00
WP2484B	$1,878.00	$1,878.00	$1,938.00	$1,938.00	$2,172.00	$2,172.00	$2,498.00
WP2490B	$2,018.00	$2,018.00	$2,085.00	$2,085.00	$2,336.00	$2,336.00	$2,687.00
WP2496B	$2,160.00	$2,160.00	$2,231.00	$2,231.00	$2,501.00	$2,501.00	$2,875.00
WP3084B	$2,285.00	-	-	$2,358.00	-	$2,646.00	$3,044.00
WP3090B	$2,450.00	-	-	$2,532.00	-	$2,841.00	$3,267.00
WP3096B	$2,627.00	-	-	$2,714.00	-	$3,046.00	$3,503.00

Sink Base Vanities

SKU	PW, PD, PS, PR, AW	PH, SL, TW, AG, AB, AX, AR, AZ	AN, TQ, AA, AH, AE	CZ
S2421B	$538.00	$556.00	$623.00	$716.00
S3021B	$682.00	$700.00	$785.00	$903.00
S3621B	$818.00	$845.00	$948.00	$1,090.00

2-Drawer Sink Base Vanities

SKU	PW, PD, PS, PR, AW	PH, TW, AB, AX, AZ	SL, AG, AR	AN, TQ, AA, AH	CZ	AE
S3021DL	$972.00	$994.00	$994.00	$1,114.00	$1,281.00	$1,114.00
S3021DR	$972.00	$994.00	$994.00	$1,114.00	$1,281.00	$1,114.00
S3621BDL	$1,107.00	$1,138.00	$1,138.00	$1,275.00	$1,467.00	$1,275.00
S3621BDR	$1,107.00	$1,138.00	$1,138.00	$1,275.00	$1,467.00	$1,275.00
S4821B12D	$1,491.00	$1,554.00	$1,554.00	$1,741.00	$2,002.00	$1,741.00
S6021B12D	$1,922.00	-	$2,074.00	$1,741.00	-	-

3-Drawer Vanity Base Cabinets

SKU	PW, PS, AW	PD, PR	PH, AR, AZ	SL, TW, AG, AB, AX	AN, TQ	AA, AH	CZ	AE
SVB1221	$1,027.00	$1,027.00	$1,059.00	$1,059.00	$1,187.00	-	$1,365.00	$1,189.00
SVB1521	$1,074.00	$1,074.00	$1,107.00	$1,107.00	$1,240.00	-	$1,426.00	$1,241.00
SVB1821	$1,107.00	-	-	$1,312.00	$1,507.00	-	-	-

Knee Drawers

SKU	PW, PD, PS, PR, AW	PH, SL, TW, AG, AB, AX, AR, AZ	AN, TQ, AA, AH, AE	CZ
SVDU3021	$299.00	$303.00	$340.00	$392.00

Fillers

SKU	PW, PD, AW, SL, TW, AG, AB, AX	PS, PR	PH, AR, AZ, AN, TQ, AA, AH, CZ, AE
WF330	$49.00	$57.00	$57.00
WF336	$61.00	$70.00	$70.00
WF342	$76.00	$54.00	$87.00
WF384	$140.00	$158.00	$158.00
WF396	$164.00	$185.00	$185.00
WF630	$101.00	$114.00	$114.00
WF642	$147.00	$164.00	$164.00
WF696	$323.00	$362.00	$362.00
BF3	$81.00	$92.00	$92.00
BF6	$136.00	$153.00	$153.00

Overlay & Decorative Fillers

SKU	PW, PD, AW	PS, PR, PH, AR, AA, AH, AE	SL, TW	AG, AB, AX	AZ	AN, TQ	CZ
A30WF	$81.00	-	$81.00	-	$92.00	-	$92.00
A36WF	$101.00	-	$101.00	-	$114.00	-	$114.00
A42WF	$114.00	-	$114.00	-	$129.00	-	$129.00
A3BF	$109.00	-	$109.00	-	$125.00	-	$125.00
A6BF	$227.00	-	$227.00	-	$129.00	-	$258.00
OLF330	$49.00	$57.00	$49.00	$49.00	$57.00	$57.00	$57.00
OLF336	$61.00	$70.00	$61.00	$61.00	$70.00	$70.00	$70.00
OLF342	$76.00	$87.00	$76.00	$76.00	$87.00	$87.00	$87.00
OLF630	$92.00	$103.00	$92.00	$92.00	$103.00	$103.00	$103.00
OLF636	$120.00	$136.00	$120.00	$120.00	$136.00	$136.00	$136.00
OLF642	$134.00	$151.00	$134.00	$134.00	$151.00	$151.00	$151.00
OLF384	$212.00	-	$212.00	$212.00	$238.00	$238.00	$238.00
OLF390	$971.00	-	$251.00	$251.00	$283.00	$251.00	$283.00
OLF396	$288.00	-	$288.00	$288.00	$323.00	$288.00	$323.00

Base Molding

SKU	PW, PD, AW, SL, TW, AG, AB, AX	PS, PR, PH, AR, AZ, AN, TQ, AA, AH, AE	CZ
TK8	$109.00	$123.00	$141.00
BM4	$258.00	$290.00	-

Trim Moldings

SKU	PW, PD, TW	PS, PR, AA, AH, CZ, AE	PH, AR, AZ, AN, TQ	AW	SL, AG, AB, AX
LRM8	$181.00	$203.00	$203.00	-	$181.00
TLRM8	$440.00	$493.00	$493.00	$440.00	$440.00
SLRM8	$440.00	$493.00	-	$440.00	-
SC1-3 (SM)	$44.00	$51.00	$51.00	$44.00	$44.00
SC4 (ICM)	$65.00	$74.00	$74.00	$65.00	$65.00
SC5 (OCM)	$63.00	$72.00	$72.00	$63.00	$63.00
SC6 (SM)	$72.00	$83.00	$83.00	$72.00	$72.00
SC8 (BM)	$68.00	$79.00	$79.00	$68.00	$68.00

Crown Molding

SKU	PW, PD, TW	PS, PR, AA, AH, AE	PH, AR	AW	SL	AG	AB, AX	AZ	AN	TQ	CZ
CM96	$164.00	$185.00	$185.00	$164.00	$164.00	$164.00	$164.00	$185.00	$185.00	$185.00	$185.00
CM96-4	$264.00	$301.00	-	$264.00	$264.00	-	$264.00	-	-	$301.00	$301.00
CM96B-4	-	-	-	-	$362.00	-	-	-	-	-	-
CM96C-4	$362.00	-	-	-	$362.00	-	-	-	-	-	-
CM96E-4	$347.00	-	-	-	-	-	-	$392.00	-	-	$392.00
CM96H-4	$264.00	$299.00	-	-	-	$264.00	$264.00	-	$299.00	$299.00	$299.00
CM96K-4	$312.00	$349.00	-	-	-	$312.00	$312.00	-	$349.00	-	$349.00

Panels

SKU	PW, PD, AW	PS, PR	PH	SL, AX	TW, AG, AB, AR, AZ	AN, TQ	AA, AH	CZ	AE
EPW1212D	$153.00	$153.00	$158.00	-	$158.00	-	$179.00	$205.00	-
EPW1230D	$170.00	$170.00	$170.00	$170.00	$170.00	$192.00	$192.00	$221.00	-
EPW1236D	$207.00	$207.00	$207.00	$207.00	$207.00	$234.00	$234.00	$269.00	-
EPW1242D	$247.00	$247.00	$247.00	$247.00	$247.00	$279.00	$279.00	$320.00	-
EPB24D	$429.00	$429.00	$429.00	$429.00	$429.00	$482.00	$482.00	$555.00	-
EPWP2484	$532.00	$532.00	$532.00	$532.00	$532.00	$596.00	$596.00	$686.00	-
EPWP2490	$598.00	$598.00	$598.00	$598.00	$598.00	$671.00	$671.00	$773.00	-
EPWP2496	$680.00	$680.00	$680.00	$680.00	$680.00	$736.00	$736.00	$847.00	-
DWR33412	$179.00	$201.00	$201.00	$179.00	$179.00	$201.00	$201.00	$201.00	$201.00
REP2484-3/4	$465.00	$523.00	$523.00	$465.00	$465.00	$523.00	$523.00	$601.00	$523.00
REP2496-3/4	$532.00	$596.00	$596.00	$532.00	$532.00	$596.00	$596.00	$686.00	$596.00
REP2484(3)	$538.00	$604.00	$604.00	$538.00	$538.00	$604.00	$604.00	$696.00	$604.00
REP2496(3)	$643.00	$720.00	$720.00	$643.00	$643.00	$720.00	$720.00	$829.00	$720.00
REP3096(3)	$872.00	$978.00	$978.00	$872.00	$872.00	$978.00	$978.00	$1,125.00	$978.00
FBP483614	$212.00	$238.00	$238.00	$212.00	$212.00	$238.00	$238.00	$273.00	$238.00
FBP369614	$356.00	$401.00	$401.00	$356.00	$356.00	$401.00	$401.00	$460.00	$401.00
FBP489614	$376.00	$423.00	$423.00	$376.00	$376.00	$423.00	$423.00	$487.00	$423.00
BP48341214	$354.00	$399.00	$399.00	$354.00	$354.00	$399.00	$399.00	$458.00	$399.00

Skins

SKU	PW, PD, PS, PR, AW, SL, TW, AG, AB, AX, AR, AZ, AN, TQ, AA, CZ, AE	PH, AH
BSKIN24	-	$400.00
TSKIN8424	-	$805.00
TSKIN9024	-	$861.00
TSKIN9624	-	$919.00
WSKIN1212	-	$70.00

Skins (continued)

SKU	PW, PD, PS, PR, AW, SL, TW, AG, AB, AX, AR, AZ, AN, TQ, AA, CZ, AE	PH, AH
WSKIN1224	-	$143.00
WSKIN1512	-	$87.00
WSKIN1524	-	$177.00
WSKIN1812	-	$104.00
WSKIN1824	-	$211.00
WSKIN2412	-	$138.00
WSKIN2424	-	$280.00
WSKIN3012	-	$171.00
WSKIN3612	-	$204.00
WSKIN4212	-	$237.00

Boxed Columns

SKU	PW, PD, AW, SL, TW, AG, AB, AX, AR, AZ	PS, PR, PH, AN, TQ, AA, AH, AE	CZ
CLB33	$378.00	$425.00	$425.00
CLW330	$245.00	$275.00	$276.00
CLW336	$292.00	$327.00	$327.00
CLW342	$340.00	$382.00	$382.00
CLW396	$1,133.00	$1,271.00	$1,271.00

Floating Shelves

SKU	PW, PR, AW	PD, PS, PH, SL, TW, AG, AB, AX, AR, AZ, AN, TQ, CZ	AA, AH	AE
FLS24	$195.00	-	$271.00	-
FLS30	$226.00	-	$319.00	$319.00
FLS36	$279.00	-	$280.00	$280.00
FLS42	$310.00	-	$438.00	$438.00

Valances

SKU	PW, PD, AW	PS, PR	PH	SL	TW	AG, AB	AX	AR	AZ	AN	TQ	AA, AH, AE	CZ
VAS48	$94.00	-	-	$94.00	$94.00	-	-	-	-	-	-	-	-
VAD3612	$356.00	$290.00	$256.00	$256.00	-	-	-	-	$290.00	-	-	$290.00	$905.00
VAD4212	$323.00	$365.00	$323.00	$323.00	-	-	-	-	$365.00	-	-	$365.00	$1,138.00
VAD4812	$405.00	-	$405.00	$405.00	-	-	-	-	-	-	-	-	$458.00
VAL48B	$251.00	-	-	$251.00	$251.00	-	$251.00	-	-	-	$283.00	-	-
VAL48S	$251.00	$251.00	$273.00	-	-	$251.00	$251.00	-	$283.00	$283.00	-	$283.00	$283.00
VAL54B	$273.00	-	-	$273.00	$273.00	-	$273.00	-	-	-	$307.00	-	-
VAL54S	$273.00	-	-	-	-	$273.00	$273.00	-	$307.00	$307.00	-	-	-

Range Hoods

SKU	PW, AW	PD, TW	PS, PR, AA, AH, AE	PH, AR	SL, AG, AB, AX	AZ, AN, TQ	CZ
AWH36	$1,138.00	-	-	-	-	$1,275.00	-
CWH36	$1,353.00	$1,353.00	$1,518.00	$1,518.00	$1,353.00	$1,518.00	$1,745.00
EWH36	$1,802.00	$1,802.00	$2,021.00	-	-	-	$2,324.00

Decor Legs

SKU	PW	PD	PS, PR, AE	PH	AW	SL	TW	AG	AB	AX, AN, TQ, AA, AH	AR	AZ	CZ
LEG28 B3X3	-	-	-	-	-	$556.00	-	-	-	-	-	-	-
POLE28-B3	-	-	-	-	-	$505.00	-	-	-	-	-	-	-
PLE28-W330	-	-	-	-	-	$281.00	-	-	-	-	-	-	-
POLE28-W336	-	-	-	-	-	$310.00	-	-	-	-	-	-	-
POLE28-W342	-	-	-	-	-	$356.00	-	-	-	-	-	-	-
POLE28-T384	-	-	-	-	-	$612.00	-	-	-	-	-	-	-
POLE28-T390	-	-	-	-	-	$647.00	-	-	-	-	-	-	-

Decor Legs (continued)

SKU	PW	PD	PS, PR, AE	PH	AW	SL	TW	AG	AB	AX, AN, TQ, AA, AH	AR	AZ	CZ
POLE28-T396	-	-	-	-	-	$685.00	-	-	-	-	-	-	-
TP3/WF34-1/2	$460.00	$460.00	$523.00	-	-	$460.00	-	-	$460.00	-	$523.00	-	$523.00
LEG75	$556.00	-	$623.00	-	-	-	-	$556.00	$556.00	-	-	-	$623.00
LEG81	$390.00	$390.00	-	-	$390.00	$390.00	-	-	-	-	-	$440.00	$441.00
LEG82	$369.00	$369.00	-	-	-	-	-	-	-	-	-	$417.00	$417.00
LEG83	$432.00	-	-	-	$432.00	$432.00	$432.00	-	-	-	-	-	-
POLE75-B3	$505.00	-	$567.00	$567.00	$505.00	-	-	$505.00	$505.00	-	-	$567.00	$567.00
POLE75-W330	$281.00	-	-	-	$281.00	-	-	$281.00	-	-	-	$316.00	$316.00
POLE75-W336	$310.00	-	-	-	$310.00	-	-	$310.00	-	-	-	$347.00	$347.00
POLE75-W342	$356.00	-	-	-	$356.00	-	-	$356.00	-	-	-	$401.00	$401.00
POLE75-T384	$612.00	-	-	-	$612.00	-	-	$612.00	-	-	-	$685.00	$685.00
POLE75-T390	$647.00	-	-	-	$647.00	-	-	$647.00	-	-	-	$725.00	$726.00
POLE75-T396	$685.00	-	-	-	$685.00	-	-	$685.00	-	-	-	$767.00	$767.00

Corbels

SKU	PW	PD	PS, PR, PH, AR, AE	AW	SL	TW	AG	AB	AX, AN, TQ, AA, AH	AZ, CZ
CORBEL56	$283.00	-	-	$283.00	$283.00	$283.00	-	$283.00	-	-
CORBEL57	$440.00	-	-	$440.00	$440.00	-	-	-	-	-
CORBEL58	-	-	-	-	-	-	-	-	-	-
CORBEL59	$212.00	$212.00	$238.00	$212.00	-	-	$212.00	$212.00	-	$238.00
CORBEL60S	$401.00	-	-	$401.00	$401.00	$401.00	-	$401.00	-	-
CORBEL60L	-	-	-	-	$867.00	-	-	-	-	-
CORBEL75S	$354.00	-	-	$354.00	-	-	$354.00	$354.00	-	$399.00
CORBEL75M	$482.00	-	-	$482.00	-	-	$482.00	$482.00	-	$543.00
CORBEL75L	$512.00	-	-	$482.00	-	-	$512.00	$512.00	-	$574.00

Glass Doors

SKU	PW, PD, AW, AG	PS, AZ, AH	PR	PH	SL	TW	AB	AX	AR	AN	TQ	AA	CZ	AE
W1212GD	$120.00	$136.00	$136.00	$136.00	-	$120.00	$120.00	-	$136.00	-	-	$136.00	$156.00	-
W1512GD	$128.00	$145.00	$145.00	$145.00	-	-	$128.00	-	$145.00	-	-	$145.00	$166.00	-
W1812GD	$160.00	$179.00	$179.00	$179.00	-	$160.00	$160.00	-	$179.00	-	-	$179.00	$206.00	-
W2112GD	$190.00	$213.00	$213.00	$213.00	-	$190.00	$190.00	-	$213.00	-	-	$213.00	$245.00	$213.00
W2412BGD	$203.00	$227.00	-	$227.00	-	$203.00	$203.00	-	$227.00	-	-	$227.00	$261.00	-
WDC2412GD	$188.00	$211.00	$211.00	$211.00	-	$188.00	-	-	$211.00	-	-	$211.00	$241.00	-
W2712BGD	$206.00	$232.00	$232.00	$232.00	-	$206.00	$206.00	-	$232.00	-	-	$232.00	$267.00	-
W3012BGD	$210.00	$235.00	$235.00	$235.00	-	$210.00	$210.00	$210.00	$235.00	$235.00	$235.00	$235.00	$269.00	-
W3312BGD	$226.00	$254.00	$254.00	$254.00	-	$226.00	$226.00	-	$254.00	-	-	$254.00	$292.00	-
W3612BGD	$245.00	$275.00	$275.00	$275.00	-	$245.00	$245.00	-	$275.00	-	-	$275.00	$316.00	-
W1530GD	$181.00	$203.00	$203.00	$203.00	-	$181.00	$181.00	$181.00	$203.00	$203.00	$203.00	$203.00	$233.00	-
W1830GD	$238.00	$267.00	$267.00	-	-	$238.00	$238.00	$238.00	$267.00	$267.00	$267.00	$267.00	$307.00	-
W2430BGD	$316.00	$341.00	$341.00	$341.00	-	-	-	-	$341.00	$341.00	-	$341.00	$392.00	-
W3030BGD	$367.00	$412.00	$412.00	$412.00	-	$367.00	$367.00	$367.00	$412.00	$412.00	$412.00	$412.00	$474.00	-
W3630BGD	$541.00	$607.00	$607.00	$607.00	-	$541.00	$541.00	$541.00	$607.00	$607.00	$607.00	$607.00	$698.00	-
WDC2430GD	$194.00	$218.00	$218.00	$218.00	-	$194.00	$194.00	$194.00	$218.00	$218.00	$218.00	-	$251.00	-
W1536GD	$214.00	$240.00	$240.00	$240.00	-	$214.00	$214.00	$214.00	$240.00	$240.00	$240.00	$240.00	$277.00	-
W1836GD	$286.00	$321.00	$321.00	$321.00	-	$286.00	$286.00	$286.00	$321.00	$321.00	$321.00	$321.00	$369.00	-
W2436BGD	$365.00	$395.00	$395.00	$395.00	-	-	$319.00	-	$395.00	$395.00	-	$395.00	$734.00	-
W3036BGD	$417.00	$467.00	$467.00	$467.00	-	$417.00	$417.00	$417.00	$467.00	$467.00	$467.00	$467.00	$537.00	-
W3636BGD	$581.00	$652.00	$652.00	$652.00	-	$581.00	$581.00	$581.00	$652.00	$652.00	$652.00	$652.00	$750.00	-
WDC2436GD	$232.00	$260.00	$260.00	$260.00	-	$232.00	$232.00	$232.00	$260.00	$260.00	$260.00	$260.00	$334.00	-
WDC273615GD	$273.00	$308.00	$308.00	$308.00	-	$273.00	$273.00	$273.00	$308.00	-	$308.00	$308.00	$354.00	-
W1542GD	$251.00	$283.00	$283.00	$283.00	-	$251.00	$251.00	$251.00	$283.00	$283.00	$283.00	$283.00	$325.00	-
W1842GD	$332.00	$371.00	$371.00	$371.00	-	$332.00	$332.00	$332.00	$371.00	-	$371.00	$371.00	$427.00	-
W2442BGD	$443.00	$474.00	$474.00	$474.00	-	-	$388.00	-	$474.00	$474.00	-	$474.00	$545.00	-
W3042BGD	$515.00	$576.00	$576.00	$576.00	-	$515.00	$515.00	$515.00	$576.00	$576.00	$576.00	$576.00	$663.00	-
W3642BGD	$718.00	$805.00	$805.00	$805.00	-	$718.00	$718.00	$718.00	-	$805.00	$805.00	$805.00	$926.00	-
WDC2442GD	$271.00	$305.00	$305.00	$305.00	-	$271.00	$271.00	$271.00	$305.00	$305.00	$305.00	$305.00	$350.00	-
WDC274215GD	$334.00	$374.00	$374.00	$374.00	-	$334.00	$334.00	$334.00	$374.00	$336.00	$374.00	$374.00	$431.00	-

Mullion Glass Doors

SKU	PW, PD, PS, PR, PH, AW, AG, AB, AX, AR, AZ, AA, AH, CZ, AE	SL	TW	AN	TQ
W1530MGD	-	$199.00	$199.00	-	$223.00
W1830MGD	-	$262.00	$262.00	-	$297.00
W2430BMGD	-	$348.00	$348.00	-	$374.00
W3030BMGD	-	$406.00	$406.00	-	$454.00
W3630BMGD	-	$595.00	-	-	-
WDC2430MGD	-	$214.00	$214.00	-	$240.00
W1536MGD	-	$236.00	$236.00	-	$265.00
W1836MGD	-	$314.00	$314.00	$352.00	$352.00
W2436BMGD	-	$378.00	$378.00	-	$425.00
W3036BMGD	-	$458.00	$458.00	-	$515.00
W3636BMGD	-	$639.00	-	-	-
WDC2436MGD	-	$254.00	$254.00	-	$286.00
WDC273615MGD	-	$303.00	$303.00	-	$341.00
W1542MGD	-	$276.00	$276.00	-	$310.00
W1842MGD	-	$365.00	$365.00	-	$410.00
W2442BMGD	-	$487.00	$487.00	-	$508.00
W3042BMGD	-	$578.00	$567.00	-	$635.00
W3642BMGD	-	$790.00	-	-	-
WDC2442MGD	-	$333.00	$299.00	$336.00	$336.00
WDC274215MGD	-	$367.00	-	-	$412.00

Lattice Doors

SKU	PW, PD, PS, PR, PH, AW, AG, AB, AX, AR, AZ, AN, TQ, AA, AH, CZ, AE	SL	TW
SB30B-ND-SP	-	-	$652.00
SB33B-ND-SP	-	$683.00	$683.00
SB36B-ND-SP	-	$716.00	$716.00

Touch-Up & Repair

SKU	PW, PD, PS, PR, PH, AW, SL, TW, AG, AB, AX, AR, AZ, AN, TQ, AA, AH, CZ, AE
TUK	$86.00
STAIN/SPRAY	$97.00

Samples

SKU	PW, PD, PS, PR, PH, AW, SL, TW, AG, AB, AX, AR, AZ, AN, TQ, AA, AH, AE	CZ
SMD3015	$50.00	$50.00
SB15 MINI	$75.00	$121.00

Roll-Out Trays

SKU	PW, PD, PS, PR, PH, AW, SL, TW, AG, AB, AX, AR, AZ, AN, TQ, AA, AH, CZ, AE
15RT-DR	$196.00
18RT-DR	$220.00
21RT-DR	$234.00
24RT-DR	$240.00
27RT-DR	$264.00
30RT-DR	$290.00
33RT-DR	$351.00
36RT-DR	$414.00

Trash Can Pullout

SKU	PW, PD, PS, PR, PH, AW, SL, TW, AG, AB, AX, AR, AZ, AN, TQ, AA, AH, CZ, AE
TCR21-2	$747.00

Standard Sink Base Cabinets

SKU	W	H	D	Doors
SB24B	24	34.5	24	2
SB27B	27	34.5	24	2
SB30B	30	34.5	24	2
SB33B	33	34.5	24	2
SB36B	36	34.5	24	2
SB42B	42	34.5	24	2

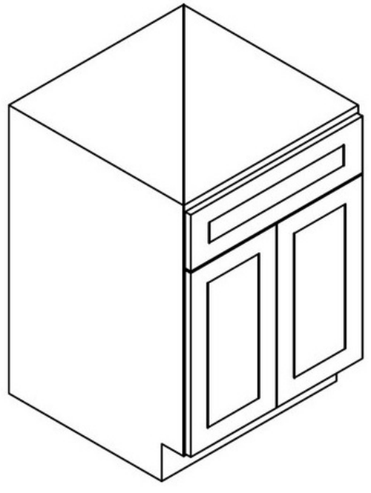

Farm Sink Base Cabinets

SKU	W	H	D	Doors
FSB30B	30	34.5	24	2
FSB33B	33	34.5	24	2
FSB36B	36	34.5	24	2

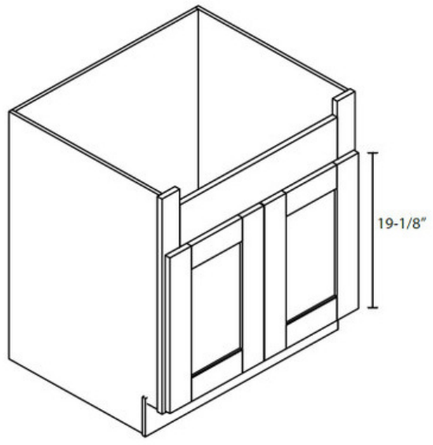

Diagonal Sink Base Cabinets

36" Diagonal Base Cabinet

SKU	W	H	D	Doors
BDCF36	36	34.5	24	1

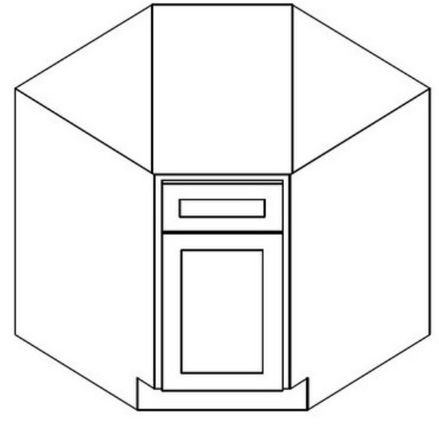

36" Diagonal Base Cabinet (Frame Only)

Front frame, door and drawer front, floor and toe kick only (not full cabinet)

SKU	Doors
BDCF36K-FL	1

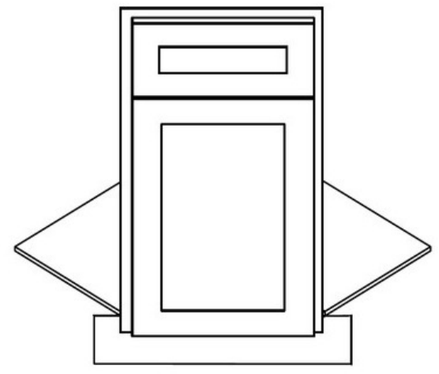

Standard Base Cabinets

SKU	W	H	D	Doors	Drawers
B09	9	34.5	24	1	1
B12	12	34.5	24	1	1
B15	15	34.5	24	1	1
B18	18	34.5	24	1	1
B21	21	34.5	24	1	1

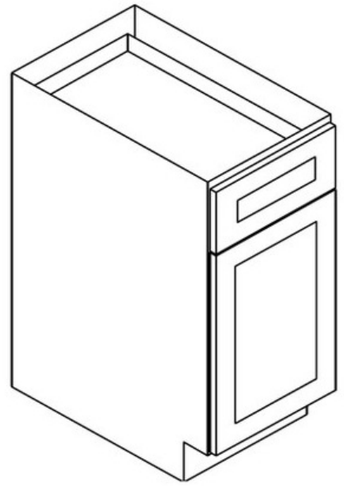

SKU	W	H	D	Doors	Drawers
B24B	24	34.5	24	2	1
B27B	27	34.5	24	2	1
B30B	30	34.5	24	2	1
B33B	33	34.5	24	2	2
B36B	36	34.5	24	2	2

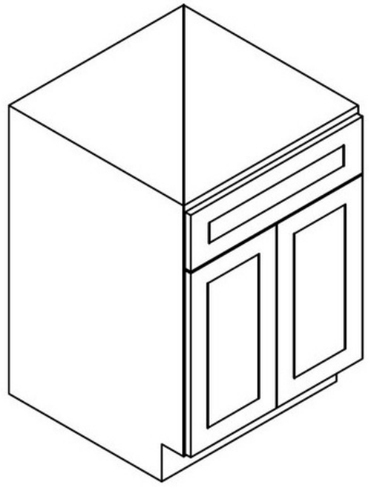

Full Height Door Base Cabinets

SKU	W	H	D	Doors
FB09	9	34.5	24	1
FB12	12	34.5	24	1
FB15	15	34.5	24	1
FB18	18	34.5	25	1

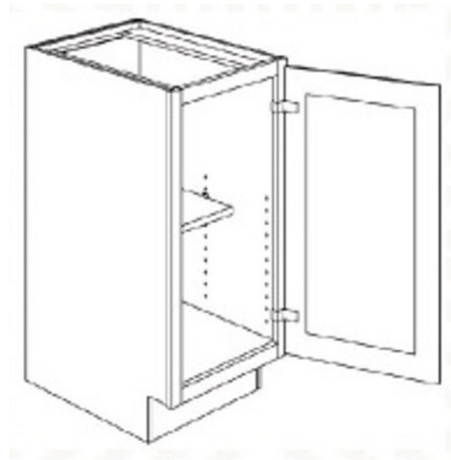

SKU	W	H	D	Doors
FB24	24	34.5	24	2
FB30	30	34.5	24	2

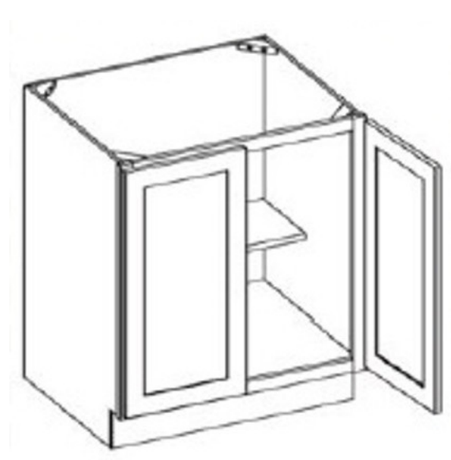

2-Drawer Base Cabinets

SKU	W	H	D	Drawers
2DB15	15	34.5	24	2
2DB18	18	34.5	24	2
2DB24	24	34.5	24	2
2DB30	30	34.5	24	2
2DB36	36	34.5	24	2

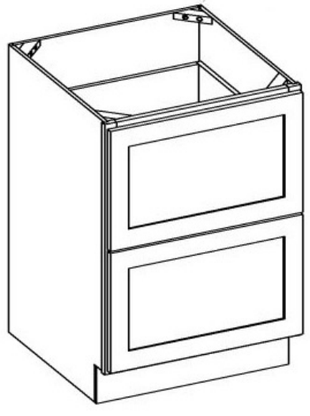

3-Drawer Base Cabinets

SKU	W	H	D	Drawers
3DB12	12	34.5	24	3
3DB15	15	34.5	24	3
3DB18	18	34.5	24	3
3DB21	21	34.5	24	3
3DB24	24	34.5	24	3
3DB27	27	34.5	24	3
3DB30	30	34.5	24	3
3DB33	33	34.5	24	3
3DB36	36	34.5	24	3

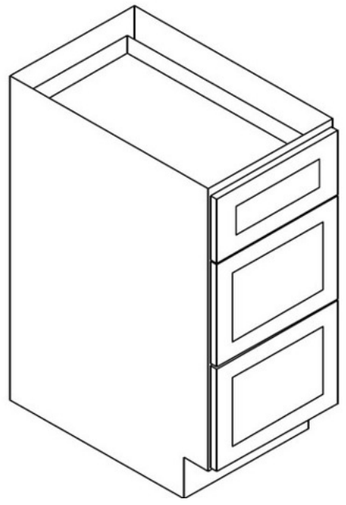

Lazy Susan Corner Base Cabinets

Bi-Fold Door, 2 independently wooden spinning trays. Not soft closing doors.

SKU	W	H	D	Doors
LS3309	33	34.5	24	1
LS3612	36	34.5	24	1

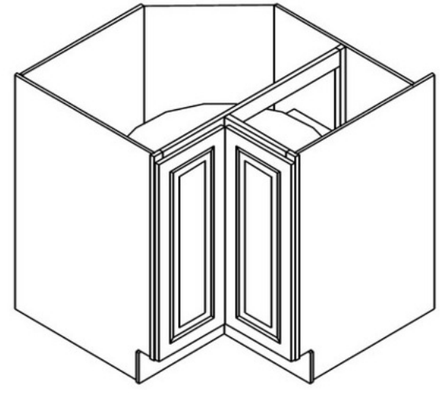

EZ-Reach Corner Base Cabinets

36" Ez-Reach Corner Base Cabinet

Bi-Fold Door, 2 independently wooden spinning trays. Not soft closing doors.

SKU	W	H	D	Doors
LS3612S	36	34.5	24	1

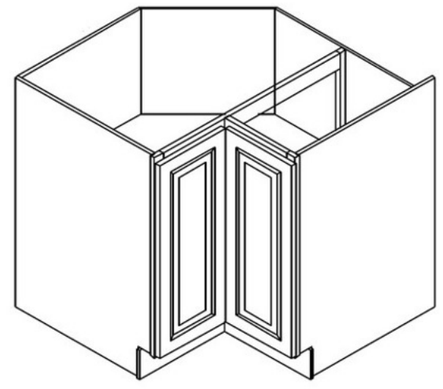

Blind Base Cabinets

Must be pulled 3"-6" from adjacent wall, requires min. 3" filler on adjacent wall

SKU	W	H	D	Doors	Drawers
BBLC39/42	36	34.5	24	1	1
BBLC42/45	39	34.5	24	1	1
BBLC45/48	42	34.5	24	1	1

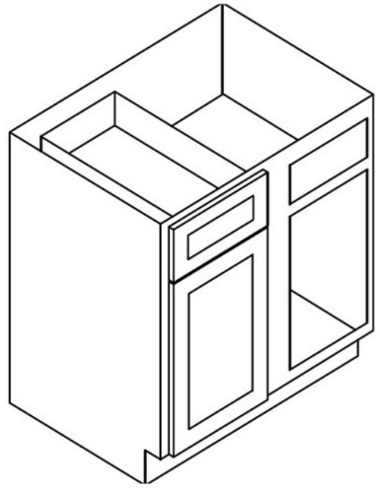

Angle Base Cabinets

24" Angle Base Cabinet

SKU	W	H	D	Doors
AB24	24	34.5	24	2

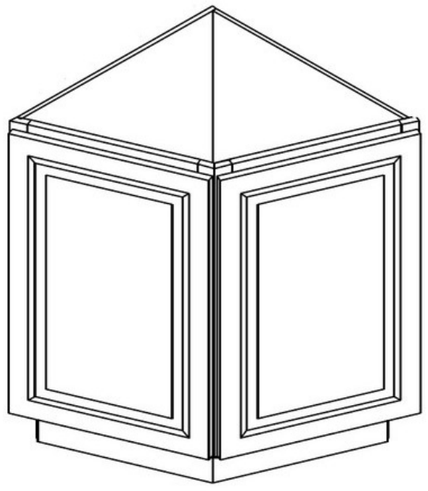

Transitional Base Cabinets

12" Base Trasitional Cabinet (Left)

SKU	W	H	D	Doors
BTC12L	12	34.5	24	1

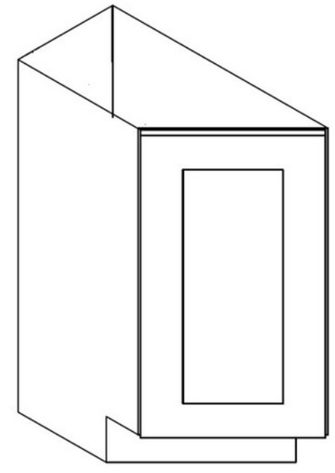

12" Base Trasitional Base Cabinet (Right)

SKU	W	H	D	Doors
BTC12R	12	34.5	24	1

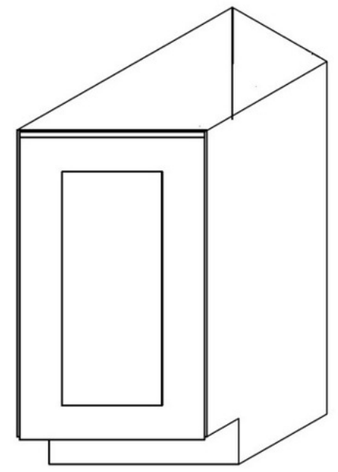

Microwave Base Cabinets

SKU	W	H	D	Drawers
B24MW	34	34.5	24	1
B27MW	27	34.5	24	1
B30MW	30	34.5	24	1

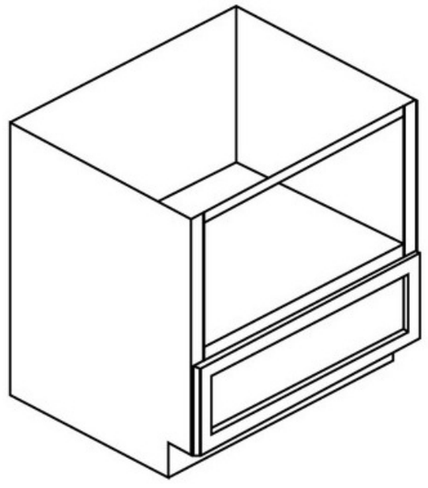

Roll-Out Trays

SKU
15RT-DR
18RT-DR
21RT-DR
24RT-DR
27RT-DR
30RT-DR
33RT-DR
36RT-DR

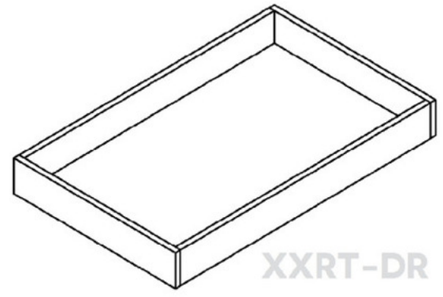

Accessory Base Cabinets

9" Base Spice-rack Pull out Cabinet

Side Mount Full Extension Drawer Track. Not soft closing. Includes cabinet and spice rack insert (2 middle racks are adjustable)

SKU	W	H	D	Doors
BFP09	9	34.5	24	1

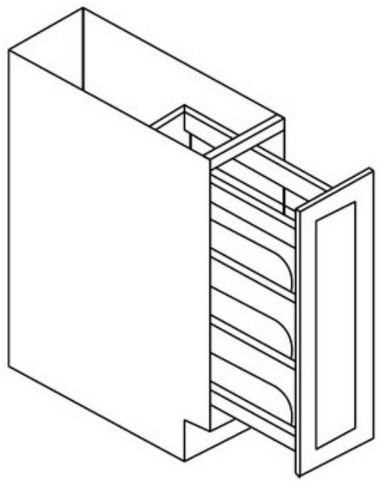

Trash Can Pullout

Trash Can Roll Out w/ 2 plastic trash bins

Fits B18 or B21 (sold separately). Full Extension, not soft closing. Includes 2 plastic cans approx 29qt capacity

SKU
TCR21-2

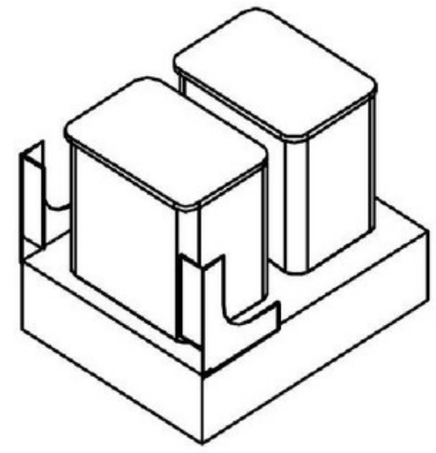

30-inch Tall Standard Wall Cabinets

SKU	W	H	D	Doors
W0930	9	30	12	1
W1230	12	30	12	1
W1530	15	30	12	1
W1830	18	30	12	1
W2130	21	30	12	1

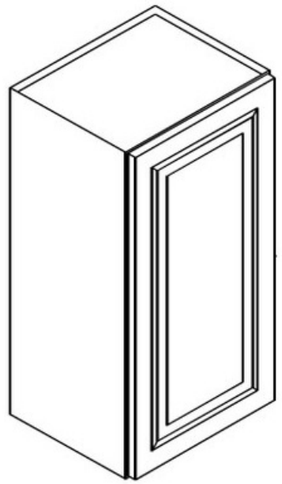

SKU	W	H	D	Doors
W2430B	24	30	12	2
W2730B	27	30	12	2
W3030B	30	30	12	2
W3330B	33	30	12	2
W3630B	36	30	12	2

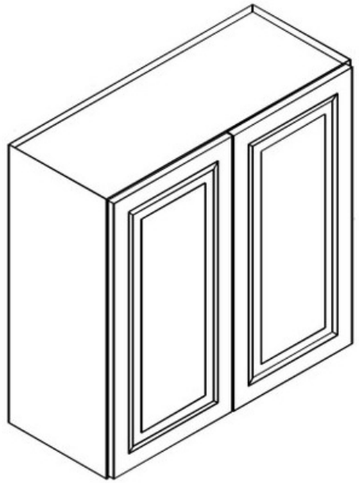

36-inch Tall Standard Wall Cabinets

SKU	W	H	D	Doors
W0936	9	36	12	1
W1236	12	36	12	1
W1536	15	36	12	1
W1836	18	36	12	1
W2136	21	36	12	1

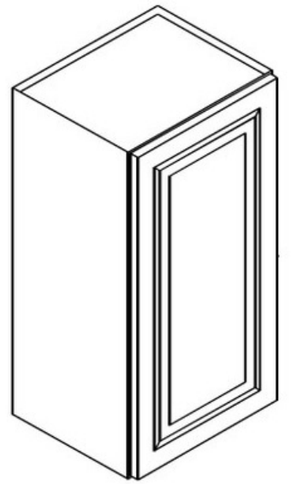

SKU	W	H	D	Doors
W2436B	24	36	12	2
W2736B	27	36	12	2
W3036B	30	36	12	2
W3336B	33	36	12	2
W3636B	36	36	12	2

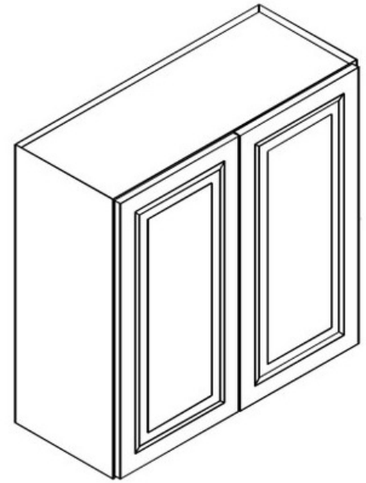

42-inch Tall Standard Wall Cabinets

SKU	W	H	D	Doors
W0942	9	42	12	1
W1242	12	42	12	1
W1542	15	42	12	1
W1842	18	42	12	1
W2142	21	42	12	1

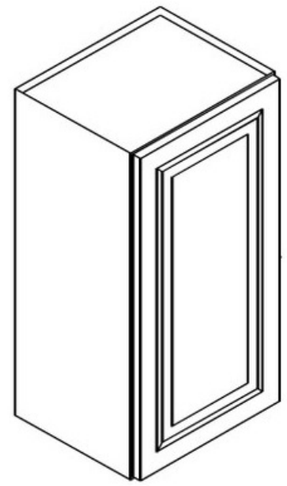

SKU	W	H	D	Doors
W2442B	24	42	12	2
W2742B	27	42	12	2
W3042B	30	42	12	2
W3342B	33	42	12	2
W3642B	36	42	12	2

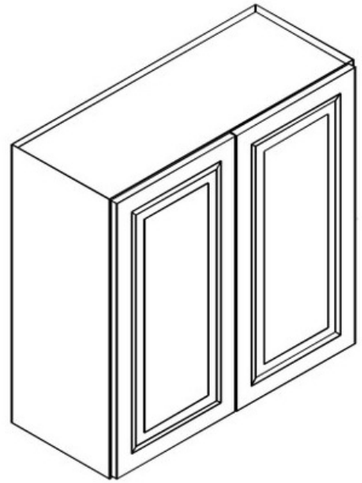

12-inch Tall Wall Cabinets

SKU	W	H	D	Doors
W1212	12	12	12	1
W1512	15	12	12	1
W1812	18	12	12	1
W2112	21	12	12	1

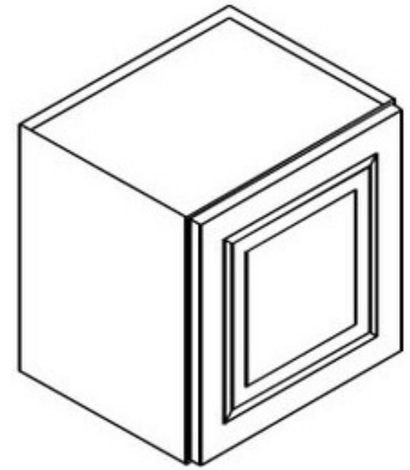

SKU	W	H	D	Doors
W2412B	24	12	12	2
W2712B	27	12	12	2
W3012B	30	12	12	2
W301224B	30	12	24	2
W3312B	33	12	12	2
W3612B	36	12	12	2
W361224B	36	12	24	2

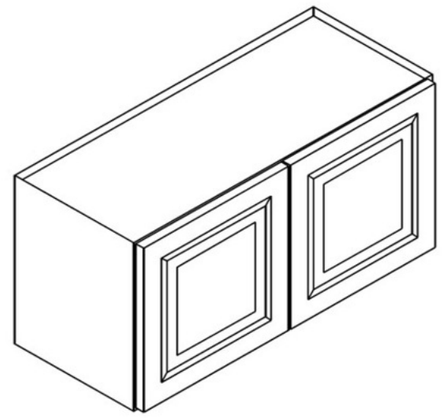

15-inch Tall Wall Cabinets

SKU	W	H	D	Doors
W2415B	24	15	12	2
W3015B	30	15	12	2
W301524B	30	15	24	2
W3315B	33	15	12	2
W331524B	33	15	24	2
W3615B	36	15	12	2
W361524B	36	15	24	2

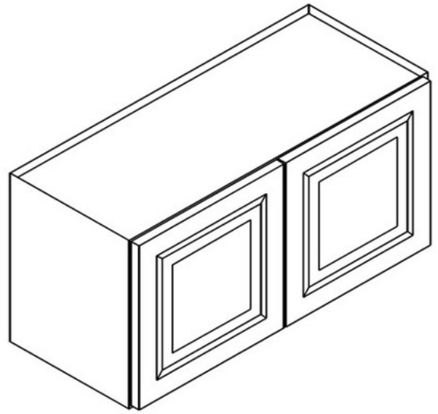

24-inch Tall Wall Cabinets

SKU	W	H	D	Doors
W2424B	24	24	12	2
W3024B	30	24	12	2
W302424B	30	24	24	2
W3324B	33	24	12	2
W332424B	33	24	24	2
W3624B	36	24	12	2
W362424B	36	24	24	2

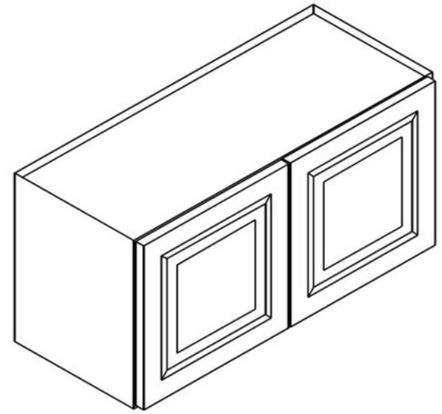

18-inch Tall Wall Cabinets

SKU	W	H	D	Doors
W2418B	24	18	12	2
W3018B	30	18	12	2
W301824B	30	18	24	2
W3318B	33	18	12	2
W331824B	33	18	24	2
W3618B	36	18	12	2
W361824B	36	18	24	2

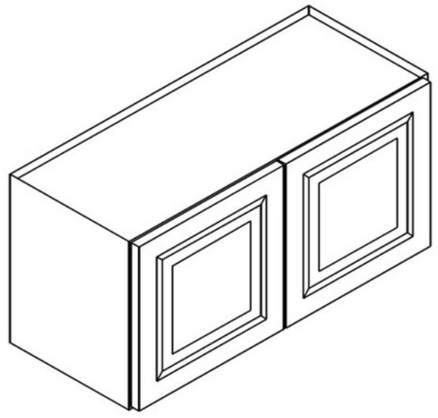

Square Corner Wall Cabinets

Bi-Fold doors. Not soft closing.

SKU	W	H	D	Doors
WSQ2430	24	30	12	1
WSQ2436	24	36	12	1
WSQ2442	24	42	12	1

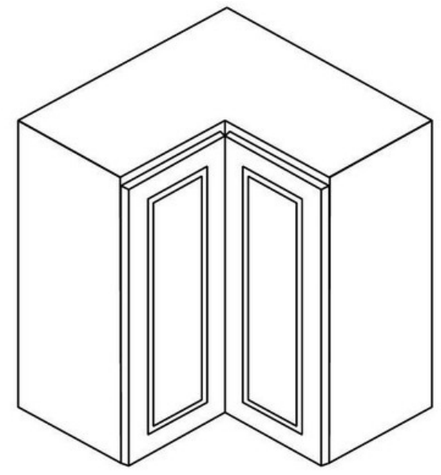

Diagonal Corner Wall Cabinets

SKU	W	H	D	Doors
WDC2412	24	12	24	1
WDC273615	27	15	27	1
WDC274215	27	15	27	1

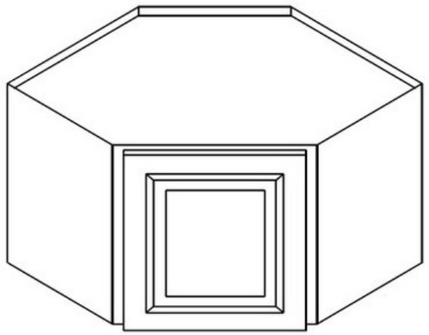

SKU	W	H	D	Doors
WDC2430	24	30	24	1
WDC2436	24	36	24	1
WDC2442	24	42	24	1

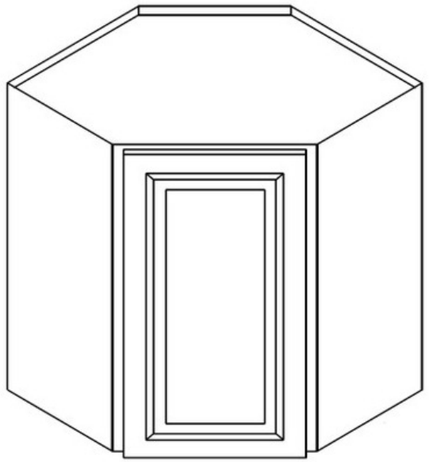

Angle Wall Cabinets

SKU	W	H	D	Doors
AW30	12	30	12	1
AW36	12	36	12	1
AW42	12	42	12	1

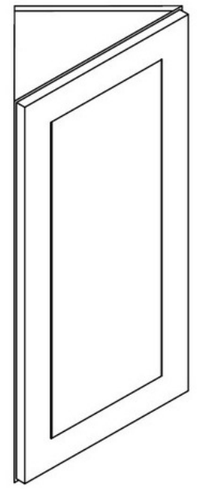

Microwave Wall Cabinets

Microwave Oven Cabinet

SKU	W	H	D
MWO3018	30	18	12

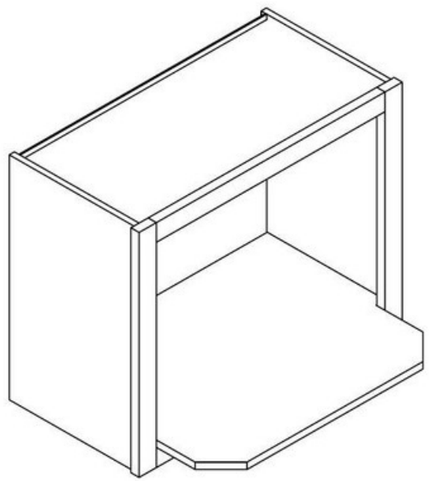

Accessory Wall Cabinets

SKU	W	H	D
WC630	6	30	12
WC636	6	36	12
WC642	6	42	12

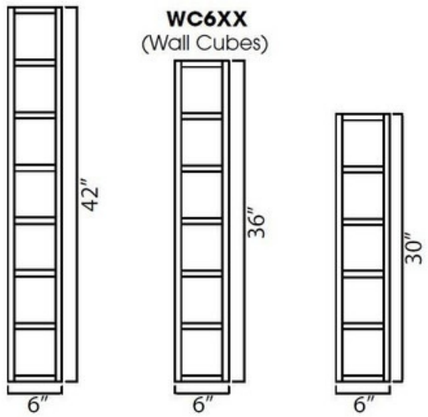

SKU	W	H	D
WES530	5	30	12
WES536	5	36	12
WES542	5	42	12

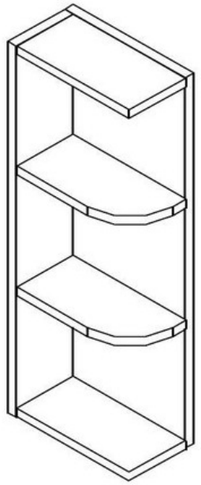

Wine Rack

SKU	W	H	D
W3018WR	30	18	12

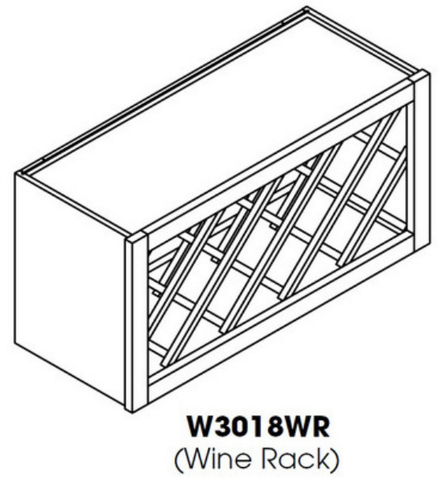

2-Drawer Wall Cabinets

Drawers are not soft-closing.

SKU	W	H	D	Doors	Drawers
W2D1848	18	48	12	1	2
W2D1854	18	54	12	1	2
W2D1860	18	60	12	1	2

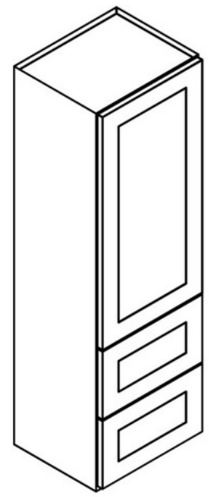

Oven Tall Cabinets

SKU	W	H	D	Doors	Drawers
OC3384B	33	84	24	2	3
OC3390B	33	90	24	2	3
OC3396B	33	96	24	2	3

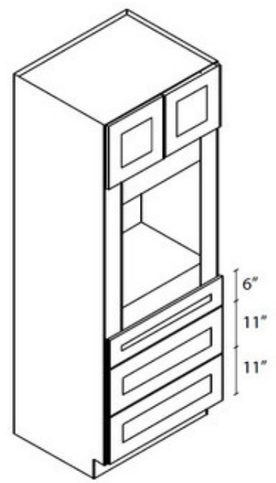

Pantry Cabinets

SKU	W	H	D	Doors
WP1584	15	84	24	2
WP1590	15	90	24	2
WP1596	15	96	24	2
WP1884	18	84	24	2
WP1890	18	90	24	2
WP1896	18	96	24	2

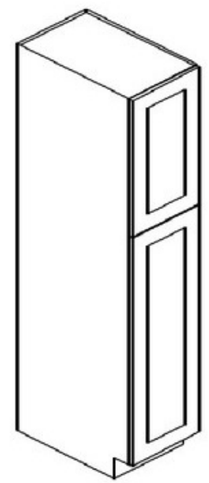

Double Oven Tall Cabinets

SKU	W	H	D	Doors	Drawers
OM3384B	33	84	24	2	1
OM3390	33	90	24	2	1
OM3396	33	96	24	2	1

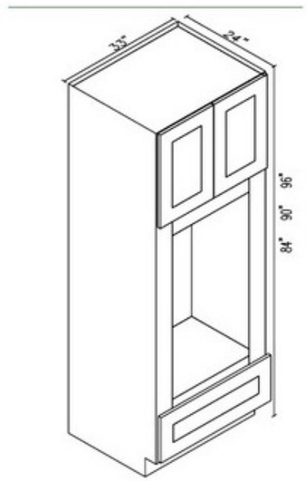

SKU	W	H	D	Doors
WP2484B	24	84	24	4
WP2490B	24	90	24	4
WP2496B	24	96	24	4
WP3084B	30	84	24	4
WP3090B	30	90	24	4
WP3096B	30	96	24	4

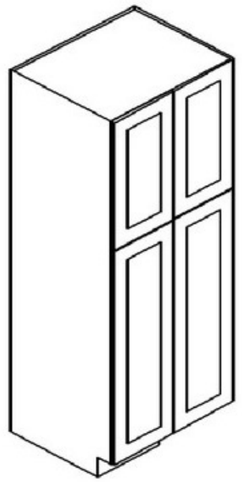

Sink Base Vanities

SKU	W	H	D	Doors
S2421B	24	34.5	21	2
S3021B	30	34.5	21	2
S3621B	36	34.5	21	2

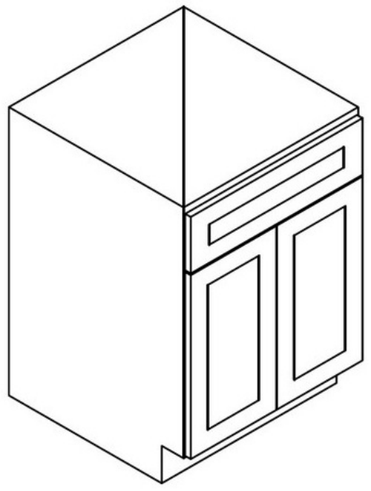

3-Drawer Vanity Base Cabinets

SKU	W	H	D	Drawers
SVB1221	12	34.5	21	3
SVB1521	15	34.5	21	3
SVB1821	18	34.5	21	3

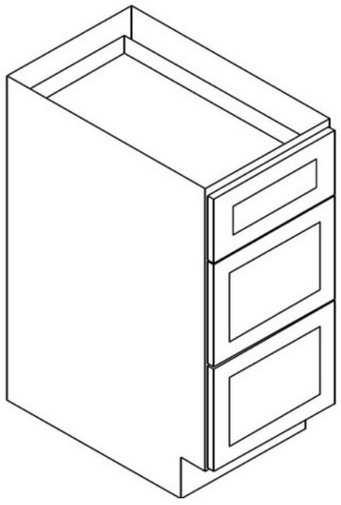

2-Drawer Sink Base Vanities

30-inch 2-Drawer Sink Base Vanities

SKU	W	H	D	Doors	Drawers
S3021DL	30	34.5	21	1	2
S3021DR	30	34.5	21	1	2

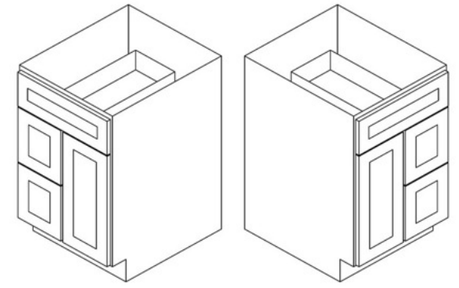

36-inch 2-Drawer Sink Base Vanities

SKU	W	H	D	Doors	Drawers
S3621BDL	36	34.5	21	2	2
S3621BDR	36	34.5	21	2	2

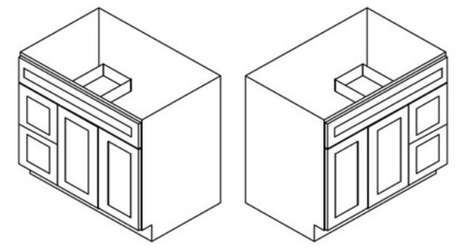

2-Drawer Sink Base Vanities

48- and 60-inch Sink Base Vanities

SKU	W	H	D	Doors	Drawers
S4821B12D	48	34.5	21	4	2
S6021B12D	60	34.5	21	4	2

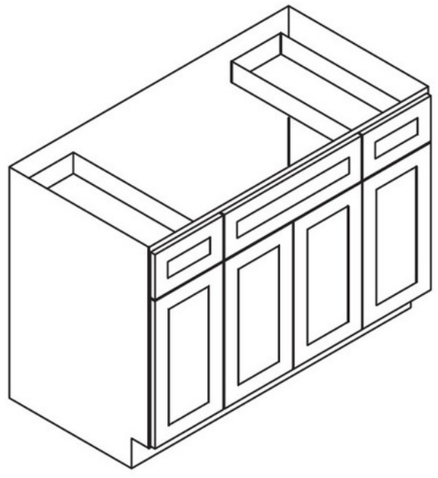

Knee Drawers

30"W Vanity Knee Drawer

SKU	W	H	D	Drawers
SVDU3021	30	7	21	1

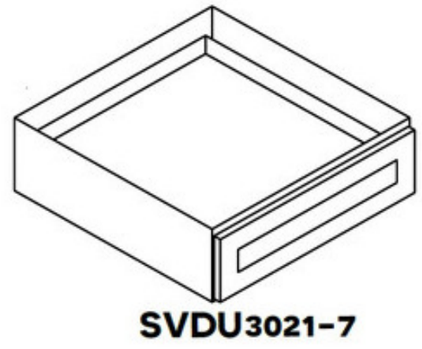

Fillers

SKU	W	H	D
WF330	3	30	0.75
WF336	3	36	0.75
WF342	3	42	0.75
WF384	3	84	0.75
WF396	3	96	0.75
WF630	6	30	0.75
WF642	6	42	0.75
WF696	6	96	0.75

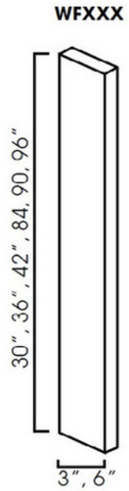

Overlay & Decorative Fillers

SKU	W	H	D
A30WF	3	30	0.75
A36WF	3	36	0.75
A42WF	3	42	0.75

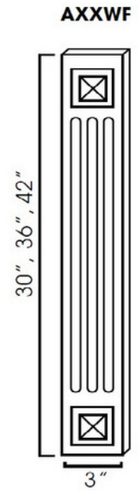

SKU	W	H	D
BF3	3	34.5	0.75
BF6	6	34.5	0.75

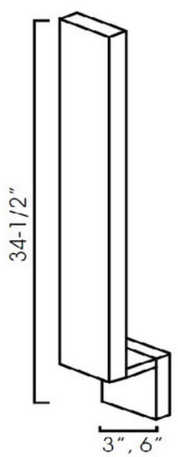

SKU	W	H	D
A3BF	3	34.5	0.75
A6BF	6	34.5	0.75

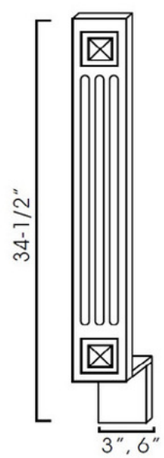

Overlay & Decorative Fillers

SKU	W	H	D
OLF330	2.5	29.25	0.75
OLF336	2.5	35.25	0.75
OLF342	2.5	41.25	0.75
OLF630	5.5	29.25	0.75
OLF636	5.5	35.25	0.75
OLF642	5.5	41.25	0.75
OLF384	2.5	78.25	0.75
OLF390	2.5	84.25	0.75
OLF396	2.5	90.25	0.75

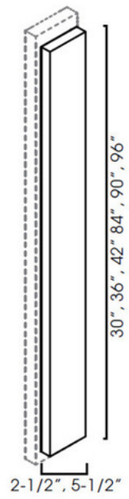

Base Molding

SKU	W	H	D
BM4	96	4.5	0.625

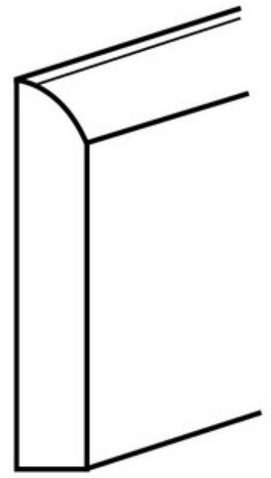

Toe Kick

SKU	W	H	D
TK8	96	4.5	0.25



Trim Moldings

Light Rail Molding - 1" Tall

LRM8

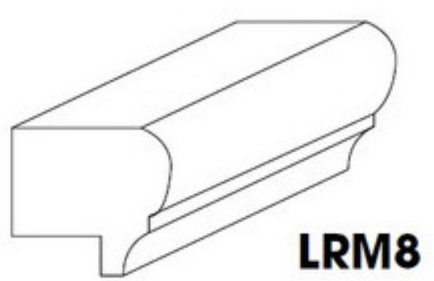

Width	Height	Depth
96"	1"	1.5"

Light Rail Molding - 2.25" Tall

TLRM8

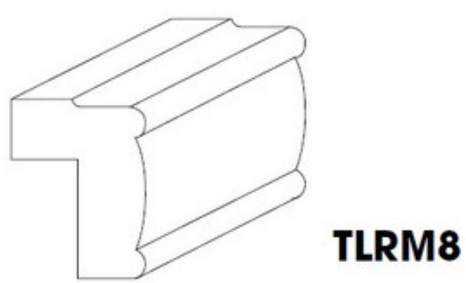

Width	Height	Depth
96"	2.25"	1.5"

Square Light Rail Molding - 1" Tall

SLRM8

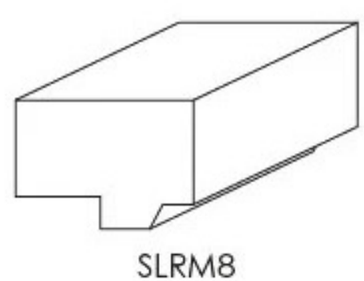

Bull Nose Scribe Molding

SC1-3 (SM)



Width
96"

Inside Corner Molding

SC4 (ICM)

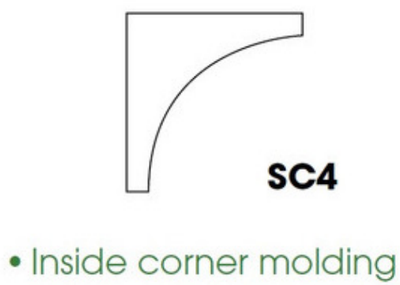

Width	Height	Depth
96"	0.75"	0.75"

Outside Corner Molding

SC5 (OCM)

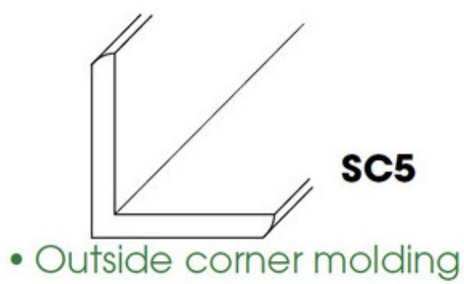

Width	Height	Depth
96"	0.75"	0.75"

Shoe Molding

SC6 (SM)

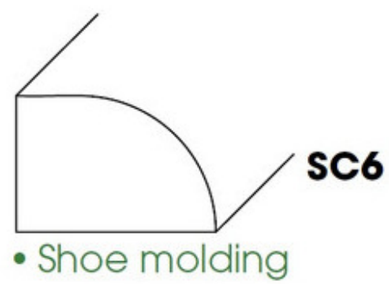

Width	Height	Depth
96"	0.5"	0.75"

Batten Molding

SC8 (BM)

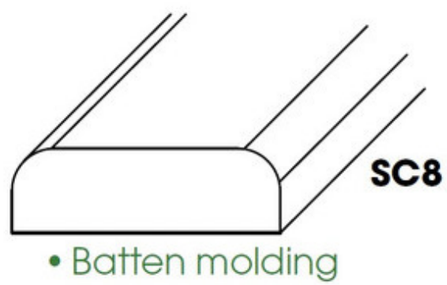

Width	Height	Depth
96"	0.75"	0.25"

Crown Molding

Crown Molding 2.5"x96"

CM96

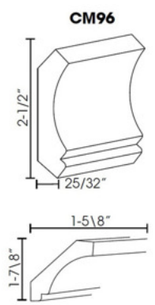

Width	Height
96"	2.5"

Crown Molding 4.5"x96"

CM96-4

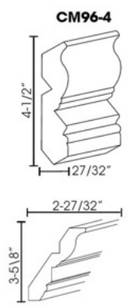

Width	Height
96"	4.5"

Crown Molding 4.5"x96"

CM96B-4

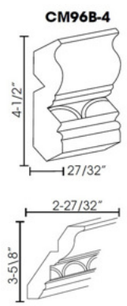

Width	Height
96"	4.5"

Crown Molding 4.5"x96"

CM96C-4

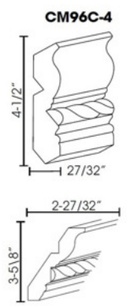

Width	Height
96"	4.5"

Crown Molding 2.625"x96"

CM96E-4

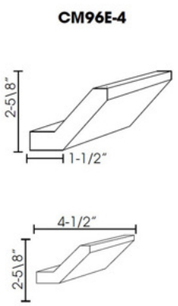

Width	Height
96"	2.625"

Decorative Large Crown Molding 4"x96"

CM96H-4

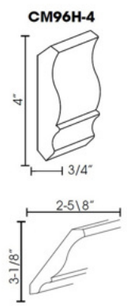

Width	Height
96"	4"

Cove Crown Molding 4"x96"

CM96K-4

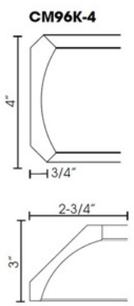

Width	Height
96"	4"

Panels

SKU	W	H	Doors
EPW1212D	11.5	11.25	1
EPB24D	23.8125	29.3125	1

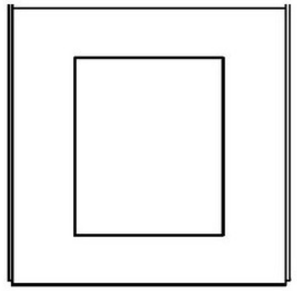

SKU	W	H	Doors
EPW1230D	11.5	29.25	1
EPW1236D	11.5	34.25	1
EPW1242D	11.5	41.25	1

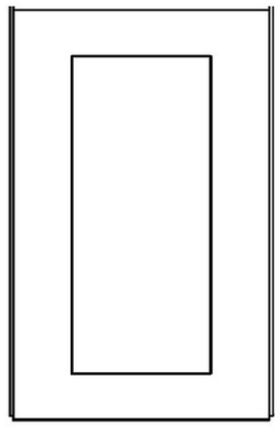

SKU	W	H	Doors
EPWP2484	23.75	Top: 29.25, Bottom: 49.25	2
EPWP2490	23.75	Top: 35.25, Bottom: 49.25	2
EPWP2496	23.75	Top: 41.25, Bottom: 49.25	2

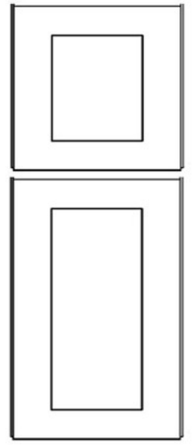

Dishwasher Panel

SKU	W	H	D
DWR33412	3	34.5	24

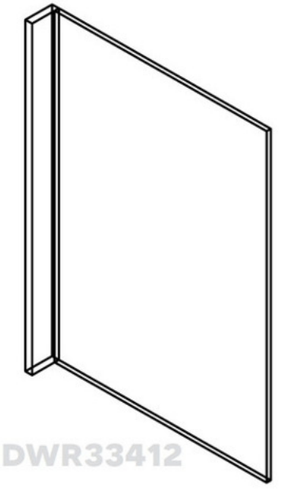

Refrigerator End Panels

Without Return Filler

2 finished edges usable without 3" return.

SKU	W	H	D
REP2484-3/4	0.75	84	24
REP2496-3/4	0.75	96	24

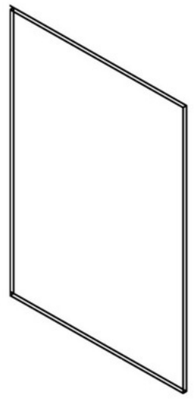

With 3-inch Return Filler

SKU	W	H	D
REP2484(3)	3	84	24
REP2496(3)	3	96	24
REP3096(3)	3	96	30

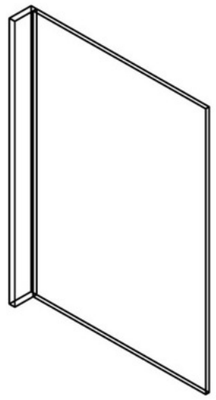

REP2484(3): 3/4" panel with 3" return filler. One finished edge usable with or without 3" return.
REP2496(3): 3/4" panel with 3" return filler. One finished edge usable with or without 3" return.
REP3096(3): 3/4" panel with 3" return filler. One finished edge usable with or without 3" return.

Finished Back Panels

Finished on one side.

SKU	W	H	D
FBP483614	36	48.25	0.25
FBP369614	36	96.25	0.25
FBP489614	96	48	0.25

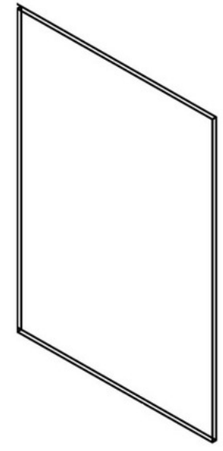

Panels

Beaded Panel

Finished on one side.

SKU	W	H	D
BP48341214	48	34.5	0.25

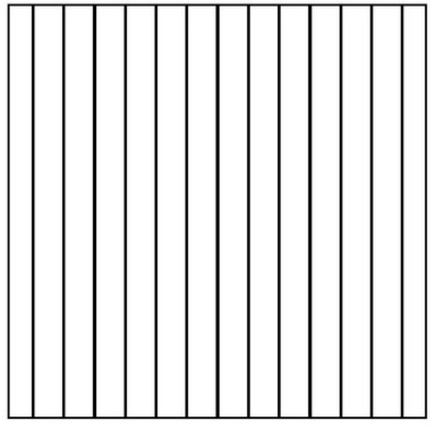

Skins

PH/AH only. Matching oak-grain finish skins for exposed cabinet sides.

SKU
BSKIN24
TSKIN8424
TSKIN9024
TSKIN9624
WSKIN1212
WSKIN1224
WSKIN1512
WSKIN1524
WSKIN1812
WSKIN1824
WSKIN2412
WSKIN2424
WSKIN3012
WSKIN3612
WSKIN4212

Boxed Columns

Boxed columns can be used as floating shelves (hardware not included). Finished on all 6 sides.

SKU	W	H	D
CLB33	3	34.5	24
CLW330	3	30	15
CLW336	3	36	15
CLW342	3	42	15
CLW396	3	96	27

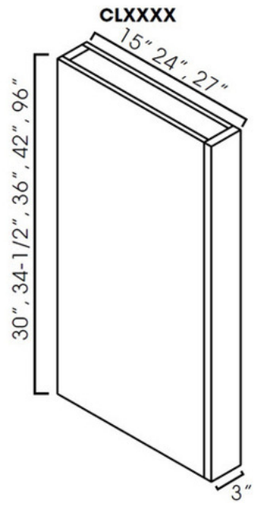

Floating Shelves

SKU	W	H	D
FLS24	24	2.5	10
FLS30	30	2.5	10
FLS36	36	2.5	10
FLS42	42	2.5	10

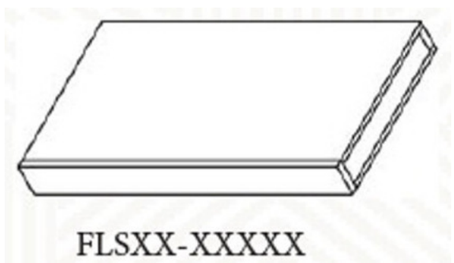

Valances

SKU	W	H	D
VAS48	48	5.5	0.75
VAD3612	36	12	0.75
VAD4212	42	12	0.75
VAD4812	48	12	0.75

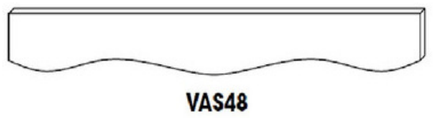

SKU	W
VAL48B	48
VAL48S	48
VAL54B	54
VAL54S	54

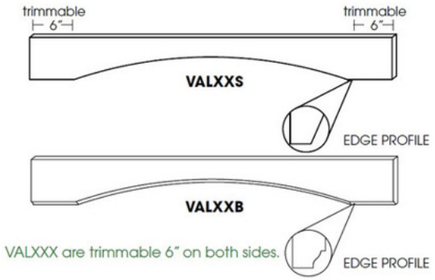

Range Hoods

Wood Hood

Installation prep is required to attach fan blowers.

SKU	W	H	D
AWH36	36	24	8

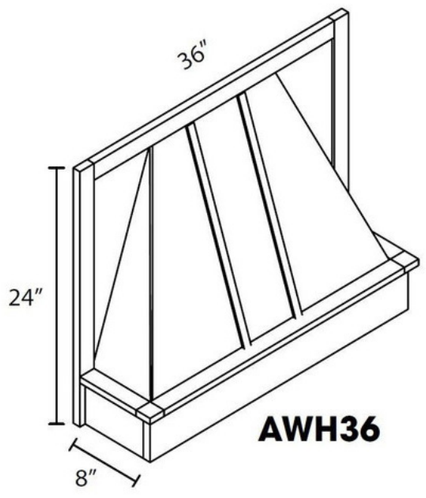

Wood Hood

Installation prep is required to attach fan blowers.

SKU
CWH36

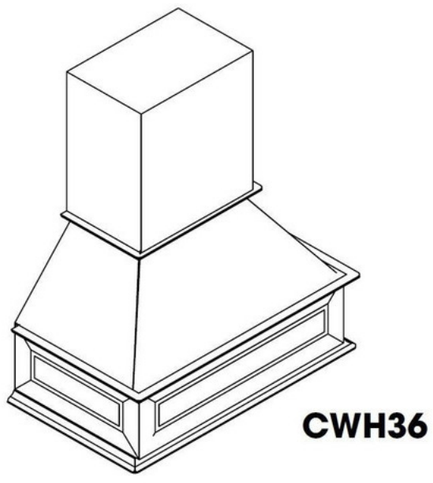

Wood Hood

Installation prep is required to attach fan blowers.

SKU	W	H	D
EWH36	37.75	46	19.875

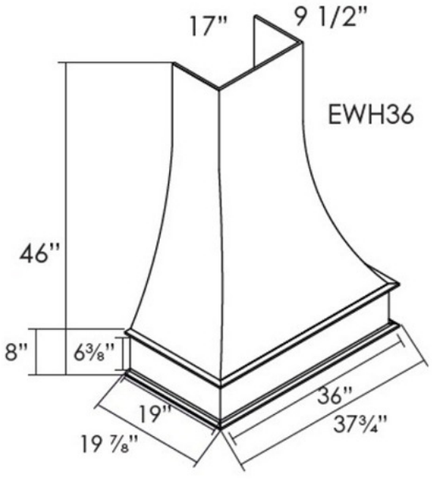

Decor Legs

Full Leg

SKU	W	H	D
LEG28 B3X3	3	36.5	3

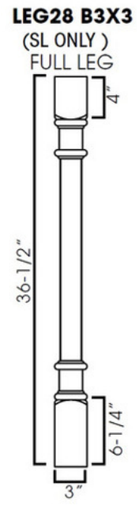

Decor Legs

SKU	W	H	D
POLE28-B3	3	36.5	2.25
PLE28-W330	3	30	2.25
POLE28-W336	3	36	2.25
POLE28-W342	3	42	2.25
POLE28-T384	3	84	2.25
POLE28-T390	3	90	2.25
POLE28-T396	3	96	2.25

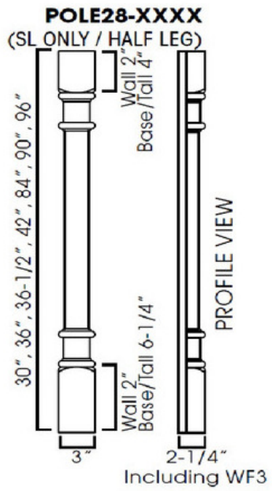

Full Leg

SKU	W	H	D
LEG75	3	36.5	3

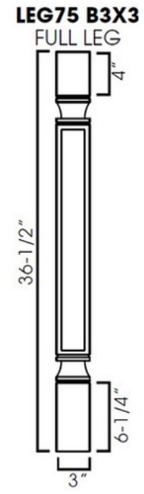

Full Leg

SKU	W	H	D
TP3/WF34-1/2	3	34.5	3

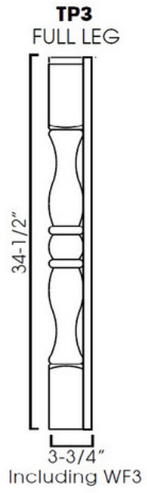

Full Leg

SKU	W	H	D
LEG81	3	34.5	3

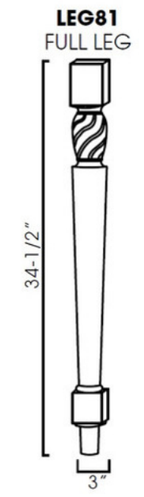

Decor Legs

Half Leg

SKU	W	H	D
LEG82	3	34.5	1.5

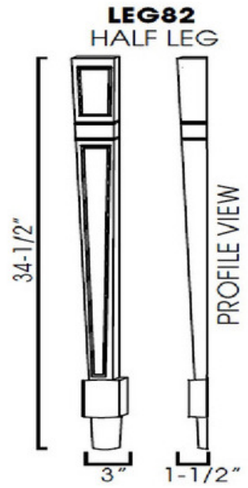

Half Leg

SKU	W	H	D
LEG83	3	34.5	1.5

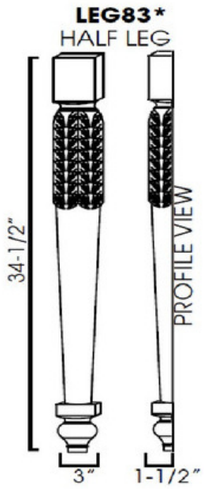

SKU	W	H	D
POLE75-B3	3	36.5	2.25
POLE75-W330	3	30	2.25
POLE75-W336	3	36	2.25
POLE75-W342	3	42	2.25
POLE75-T384	3	84	2.25
POLE75-T390	3	90	2.25
POLE75-T396	3	96	2.25

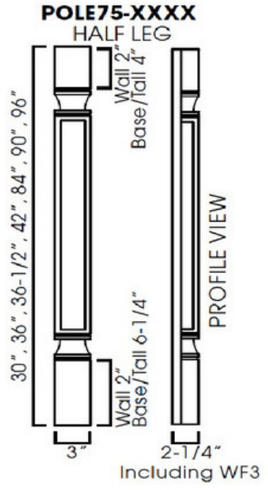

Corbels

Small & Large Corbels

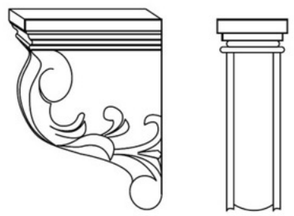

SKU	W	H	D
CORBEL56	3	6	4
CORBEL57	3	9	6

Corbel

SKU
CORBEL58

Large Corbel, Raised Center

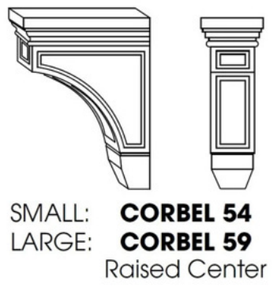

SKU
CORBEL59

Small & Large Corbels



SKU	W	H	D
CORBEL60S	5	10	5
CORBEL60L	7	17	7

Small Corbel, Recessed Center



SKU
CORBEL75S

Medium Corbel, Recessed Center



SKU
CORBEL75M

Large Corbel, Recessed Center



SKU
CORBEL75L

Glass Doors

SKU	For cabinet	Width	Height	Depth	Pieces
W1212GD	W1212	11.5	11.3125	-	1
W1512GD	W1512	14.5	11.3125	-	1
W1812GD	W1812	17.5	11.3125	-	1
W2112GD	W2112	20.5	11.3125	-	1
W2412BGD	W2412B	11.75	11.3125	-	2
WDC2412GD	WDC2412	14.75	11.3125	-	1
W2712BGD	W2712B	13.25	11.3125	-	2
W3012BGD	W3012B	14.6875	11.3125	-	2
W3312BGD	W3312B	16.25	11.3125	-	2
W3612BGD	W3612B	18.75	11.3125	-	2
W1530GD	W1530	14.5	29.3125	-	1
W1830GD	W1830	17.5	29.3125	-	1
W2430BGD	W2430B	11.75	29.3125	-	2
W3030BGD	W3030B	14.6875	29.3125	-	2
W3630BGD	W3630B	17.6875	29.3125	-	2
WDC2430GD	WDC2430	14.9375	29.3125	-	1
W1536GD	W1536	14.5	35.3125	-	1
W1836GD	W1836	17.5	35.3125	-	1
W2436BGD	W2436B	11.75	35.3125	-	2
W3036BGD	W3036B	14.6875	35.3125	-	2
W3636BGD	W3636B	17.6875	35.3125	-	2
WDC2436GD	WDC2436	14.9375	35.3125	-	1
WDC273615GD	WDC273615	14.9375	35.3125	-	1
W1542GD	W1542	14.5	41.3125	-	1
W1842GD	W1842	17.5	41.3125	-	1
W2442BGD	W2442B	11.75	41.3125	-	2
W3042BGD	W3042B	14.6875	41.3125	-	2
W3642BGD	W3642B	17.6875	41.3125	-	2
WDC2442GD	WDC2442	14.6875	41.3125	-	1
WDC274215GD	WDC274215	14.6875	41.3125	-	1

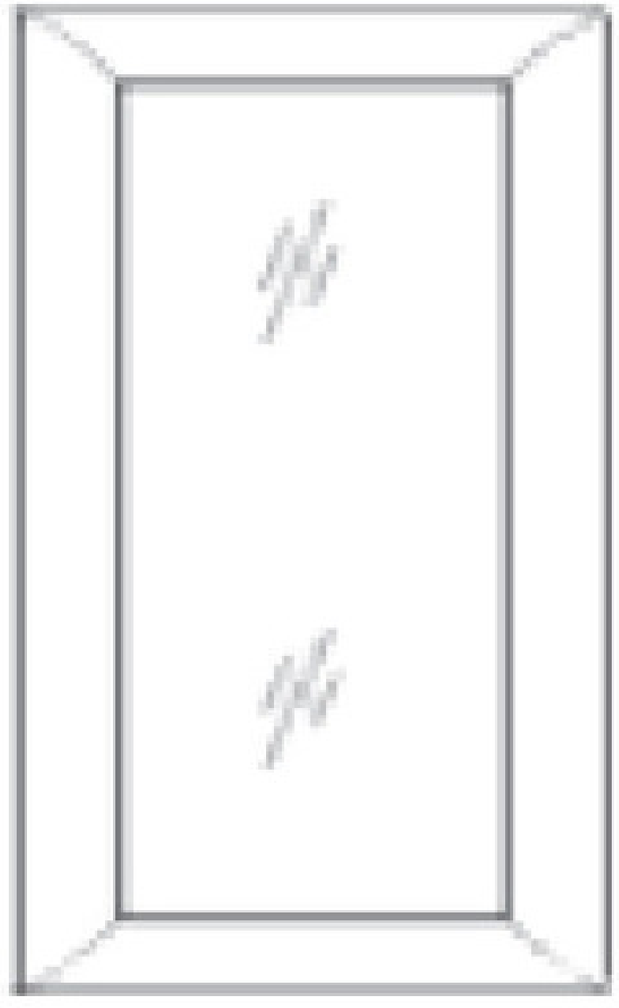

Select a cabinet SKU to view its cabinet specifications.

Mullion Glass Doors

SKU	For cabinet	Width	Height	Depth	Pieces
W1530MGD	W1530	14.5	29.3125	-	1
W1830MGD	W1830	17.5	29.3125	-	1
W2430BMGD	W2430B	11.75	29.3125	-	2
W3030BMGD	W3030B	14.6875	29.3125	-	2
W3630BMGD	W3630B	17.6875	29.3125	-	2
WDC2430MGD	WDC2430	14.9375	29.3125	-	1
W1536MGD	W1536	14.5	35.3125	-	1
W1836MGD	W1836	17.5	35.3125	-	1
W2436BMGD	W2436B	11.75	35.3125	-	2
W3036BMGD	W3036B	14.6875	35.3125	-	2
W3636BMGD	W3636B	17.6875	35.3125	-	2
WDC2436MGD	WDC2436	14.9375	35.3125	-	1
WDC273615MGD	WDC273615	14.9375	35.3125	-	1
W1542MGD	W1542	14.5	41.3125	-	1
W1842MGD	W1842	17.5	41.3125	-	1
W2442BMGD	W2442B	11.75	41.3125	-	2
W3042BMGD	W3042B	14.6875	41.3125	-	2
W3642BMGD	W3642B	17.6875	41.3125	-	2
WDC2442MGD	WDC2442	14.6875	41.3125	-	1
WDC274215MGD	WDC274215	14.6875	41.3125	-	1

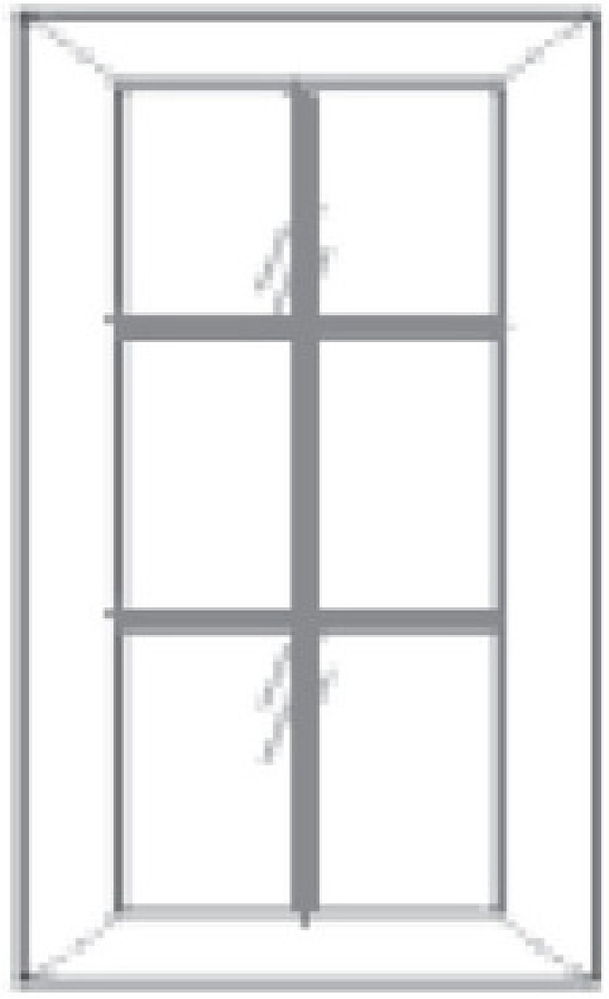

Select a cabinet SKU to view its cabinet specifications.

Lattice Doors

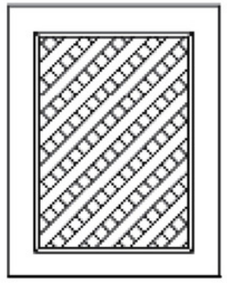

SKU
SB30B-ND-SP
SB33B-ND-SP
SB36B-ND-SP

Touch-Up Repair Kit

includes matching paint/stain repair paint pen and filler stick



SKU
TUK

Touch-Up Spray Paint



SKU
STAIN/SPRAY

Samples

Sample Door

single sample door

SKU
SMD3015



Face Frame Sample

Sample face frame with a door and drawer front. This is not a complete cabinet and does not include a cabinet box.

SKU
SB15 MINI



Shipping & Delivery

What to expect when your cabinets ship and arrive.

Freight shipping & tracking

Orders ship through third-party freight carriers. Tracking information is emailed when available. Be available to accept delivery at the scheduled time. Carrier delays, scheduling issues and additional freight-company charges are outside Whitewood Cabinets' responsibility.

Missed deliveries may result in storage, redelivery or other charges, which are the customer's responsibility.

Pallets & unloading

Shipments may arrive on heavy pallets. You may be responsible for unloading the shipment from the truck. Arrange adequate help or equipment before delivery and coordinate access and scheduling with the carrier.

Availability & timing

Inventory is verified after order placement and is not confirmed in real time at purchase. Backordered items are fulfilled when available and may extend processing or shipping times. Review the full policies for the terms that apply to your order.

01 Photograph every pallet

Take clear photos of all four sides of each pallet before and during unloading. Document visible damage and keep the photos with your order records.

02 At delivery

Note visible damage on the carrier delivery receipt. Orders may not be refused for minor damage or packaging conditions; refusal can result in additional freight, storage or other charges.

03 Inspect within 3 calendar days

Open all packaging and check every cabinet individually within 3 calendar days of delivery. Hidden damage includes manufacturing defects, concealed physical damage and packaging-related damage found after unpacking.

04 Report damage within the inspection window

Damage reported after 3 days may be denied. Not meeting the inspection and documentation requirements voids eligibility for shipping-related replacement, warranty claims or damage compensation. Provide clear documentation of the affected items when reporting an issue.

Full shipping, delivery and inspection policies: whitewoodcabinets.com/policies

Warranty, Wood, Color & Finish

Limited Lifetime Warranty

Whitewood Cabinets' Limited Lifetime Warranty covers defects in materials and workmanship under normal residential use. It applies to the original purchaser only and is non-transferable.

What is covered

Coverage includes the structural integrity of cabinet boxes, doors and drawer fronts, along with workmanship issues such as delamination, warping or cracking that are not caused by misuse.

Coverage exclusions

The warranty does not cover damage from improper installation, handling, storage or abuse; shipping damage not reported within the required inspection timeframe; water damage or humidity exposure; normal wear and tear; finish variation; modifications; or repairs by unauthorized parties.

Whitewood Cabinets is not responsible for installation. Improper installation may void warranty coverage.

Full warranty and finish policies: whitewoodcabinets.com/policies

Natural wood & finish variation

Cabinets are made with real wood and wood-based materials. Differences in color, grain pattern, texture and finish are natural characteristics. These variations are expected and are not considered defects.

Color matching & photography

Exact color matching between components or future orders is not guaranteed. Product photographs are for reference. Lighting, photography and individual screen settings can affect how a finish appears.

Review a physical sample

Compare your sample with your countertops, flooring and other finishes in your own lighting before choosing a collection. Samples help you evaluate color and texture; natural wood and finish variation still apply.

Explore samples

Let's bring your project together.

Browse online, share your plans, or talk with us about your next project.



WHITEWOOD CABINETS

whitewoodcabinets.com

(254) 300-6151

whitewoodcabinets.com/contact

orders@whitewoodcabinets.com

Free kitchen design & quotes

Plan your kitchen with a free design. Share your room measurements, appliance details and preferred finish, or request a quote for a cabinet list you already have.

Forevermark price matching

Comparing Forevermark cabinets? Send us a competing quote through our price-match request page so we can review the same styles, SKUs and quantities.

For contractors & builders

Contractors, builders, remodelers and property professionals can sign up for our contractor program for project quotes and layout assistance. Visit the program page for eligibility and details.

Become a sales rep

Interested in representing Whitewood Cabinets? Explore our independent, commission-based sales opportunity and contact us for current terms.